Low–cost Housing – Technical Manual

Table of Contents

Low−cost Housing − Technical Manual **1**
- Prologue 1
  - Project's Objective 1
  - The Rationale 2
  - Organisational Structure 2
  - Skills improvement, employment & income generation 2
  - Beneficiaries 3
- Introduction 3
- Technological Concept 3
  - Housing designs and urban development considerations 3
  - Introduction of new technologies 4
  - Cost − efficiency considerations 4
  - Environmental considerations 4
- Built Examples 5
  - A built example: the Addis housing type 5
  - A built example: the Mekelle "A" housing type 10
- Design Basics 14
  - Basic measurements and masonry bond 15
- Building Parts 1 16
  - Full HCB 16
  - Half HCB 17
  - U−Shaped HCB 18
  - Column HCB 20
  - Columns made out of column−HCBS 20
  - Slab HCB 21
- Basic Techniques Use and Description of Machinery and Tools 1 22
  - Hollow Concrete Block (HCB) Production 22
- Building Parts 2 26
  - Precast beams 26
- Basic Techniques Use and Description of Machinery and Tools 2 27
  - Bending reinforcement for precast beams 27
  - Vibrating table 28
  - Hooks for holding parts of formwork together 32
  - Formwork for foundations and slabs 33
  - The Manhole 35
  - Concrete spacers for fixing position of reinforcement 36
- Construction Process 38
  - An exemplary construction process 38
- Structural Design 42
  - Structural design 42
- Back Cover 66

Low–cost Housing – Technical Manual

Prepared by:

Ministry of Federal Affairs

Deutsche Gesellschaft fuer Technische Zusammenarbeit GmbH German Technical Co–operation

Low–cost Housing Project
P.O. Box 22182/Code 1000
Addis Ababa/Ethiopia
Tel.: 00251–1–53 48 42/15 97 84
Fax: 00251–1–50 39 98
E–mail: Lch@telecom.net.et

MH Engineering
Consulting Engineers P.L.C.
P. O. Box 1553
Addis Ababa/Ethiopia
Tel.: 00251–1–633081
Fax: 00251–1–627768
E–mail: messele.haile@telecom.net.et

Illustrations and layout:
Dipl.–Ing. Carsten Stammeier/Dipl. Ing. Ralph Trosse

Prologue

The Low–cost Housing Project is established, based on a bilateral agreement between the Federal Democratic Republic of Ethiopia and the Federal Republic of Germany. It is implemented by the Ethiopian Ministry of Federal Affairs with the support of GTZ (German Technical Co–operation).

After a first phase (2/1999 – 1/2002) the Project has entered into a second phase which ends in July, 2006.

Project's Objective

The objective of the Project is to enable low–income urban dwellers – with special attention to female–headed households – to acquire homes of their own in order to improve their living conditions.

Financially viable and technically sound replicable housing solutions are elaborated at federal, regional and municipal level to be implemented thereafter.

The diversification of the construction sector is a key factor for a sustainable dissemination of cost–efficient building technologies.

The promotion of the construction sector is initiated through Public Private Partnerships (PPP) between German and Ethiopian private sector organizations, facilitated by the German and Ethiopian public sector.

The Rationale

85% of the urban population of Ethiopia lives in inhuman, unhygienic and confined conditions.

Their housing situation lacks infrastructure and is dominated by "chicka" type of construction (traditional construction method with mud and wood).

The population growth of 2.8 % per year and the accelerated migration to urban centres (6 % and more per year) have dramatically increased the demand for affordable, decent housing.

The competitiveness of the construction sector is low because of its low quality and relatively high prices. The reasons are:

- The construction sector lacks skilled construction workers
- The construction sites lack efficient management
- High costs of construction due to wastage of building material of about 30% on construction sites
- Absence of a Federal and Regional Building Laws and a Federal Urban Planning Law
- Limited knowledge about cost–efficient technologies
- The construction industry is not diversified, no specialization in regard to building material suppliers, etc.
- Limited private sector initiative and organizational strength.

Organisational Structure

While the Ministry of Federal Affairs is the Owner of the Project, the Partners on regional and local level are National Regional States, Regional Bureaus of Works and Urban Development, Regional Construction and Design Authorities, Urban Development Offices and Municipalities such as:

- The Municipality of Adama
- The Addis Ababa City Government
- The Bahir Dar Municipality
- The Dire Dawa Administration
- The Regional Government of Gambella
- The Municipality of Jijiga
- The National Regional State of Tigray.

The demands for the services of the Lowcost Housing Project are increasing daily. The nine Regions as well as Addis Ababa and Dire Dawa have called for intervention to support their housing programs offering serviced plots (infrastructure provision) free of lease.

Skills improvement, employment & income generation

The labourers working on the construction sites are introduced to new technologies, receiving systematic training – on – the – job. This helps them in selling their labour force later on, at a higher price as well as multiplying the technology in their respective location. The construction sites, having 100 – 200 labourers each, contribute to employment generation and increase the purchasing power of the labourers involved, consequently boosting the local economy.

Beneficiaries

The beneficiaries are within an income range of roughly Birr 300 and Birr 1300 gross monthly family household income.

They must have a fixed employment as civil servants or within the private sector if they intend to be eligible for a credit through the formal banking system.

Self−payers are also highly welcome if they can deposit 50% of the construction costs before entering into a contract with the Project.

The income range of beneficiaries intends to promote economically and socially mixed settlements avoiding segregation and promoting social stability and economic development.

Introduction

Cost−efficiency is one of the most crucial points of low−cost housing. It can mainly be achieved by standardisation of building elements and reducing the number of different items needed. Pre−fabrication and the use of machines and special tools to produce these standardized elements maximize productivity, resulting in lower costs per unit.

Through intelligent dual−usage of building elements as building parts and as formwork the construction costs are reduced. In the construction process, the amount of wasted materials for formwork can be reduced as well the time for building and dismantling formwork. Re−usage of metal formwork, which can be adapted to every kind of house, helps to economise on the construction costs.

This has also a strong positive effect on the environment.

By planning the work flow accurately, for example the curing time of concrete construction, the productivity can be raised and the quality secured.

The manual describes a modular building system introduced by the Low−Cost Housing Project. In a first part machines and special tools for the pre−fabrication process and simple handycraft−techniques are described. In part two the modular system is introduced: its measurement basics and the standardized building parts are described. The third part visualizes a typical building process on the basis of a model to illustrate the order in which the building parts have to be assembled. A built sample is shown in the fourth part together with pictures from the construction site.

This manual is mainly meant to be a guideline for architects, engineers, construction contractors and their staff such as site supervisors and foremen.

It is not meant to be a substitute for a structural design made by a professional structural engineer. All dimensions presented in this manual are based on experience and calculations made with regard to recent projects. Nevertheless structural calculation has to be done for every project separately.

Technological Concept

Housing designs and urban development considerations

The housing design considers land as scarce commodity and the provision of basic infrastructure as relevant cost factor. The design therefore emphasises densification, small plot sizes and vertical growth. In Addis Ababa, for example, row houses with a five−meter street front on plots of 87.5 sqm allow strong densification doubling the existing plot numbers. The row houses have separate walls in order to avoid noise problems.

The designs are based on the principle of "growing houses", growing according to the financial capabilities and varying needs of the beneficiaries. Low income dwellers will go for the cheaper solution of only ground floor housing, others will go for the more expensive solution of G+1. However, those having selected the ground unit have the chance to expand their house to G+1 once their financial capabilities have increased. This can be done by lifting the roof (EGA sheets), constructing the walls for G+1 and putting the same roof on top. In this manner, the houses can be easily adapted to the increasing needs for dwelling space of a growing family according to their financial possibilities.

In future, apartment houses (up to G+4) will be constructed in order to economize more on the costs for basic infrastructure and reduce the sqm price for construction.

However, the costs for basic infrastructure can only be economized if inbound infill areas are used. Settlements on the fringe or outside of urban centres are financially not viable because of the high costs for the provision of minimum basic infrastructure.

Introduction of new technologies

The housing designs are elaborated according to the Ethiopian Building Code Standart and take into consideration the different earthquake zones within Ethiopia.

The following new technologies are introduced by the Low−cost Housing Project:

- New hollow block size – more economical, easier to handle.
- U−shaped block, same size as hollow block used for prefabrication of lintels and beams.
- Reinforcement for columns inside of the hollow blocks – no formwork required for columns.
- Combined strip− and slab foundation – apt for any kind of soil.
- Pre – fabricated slab system (beams and hollow blocks) – no formwork required.
- Modular architectural system – adjusted to varying financial capabilities of beneficiaries.
- Designs to be adapted to any kind of soil and earthquake regions.
- Reduction of material wastage of up to 30%.
- Environmentally friendly approach, as no wood is needed for formwork.

Cost – efficiency considerations

The construction costs obtained so far vary between Birr 500 and Birr 800 per sqm, depending on the soil conditions, availability of building materials, earthquake zone and housing type. They include the direct and the overhead costs of the construction site. The costs for basic infrastructure are not included, as they are being covered by the Municipality and in certain cases partially by the beneficiaries. The costs for sanitary and electrical installation as well as for sealed, collective septic tanks with soak away pits are included in the sqm price.

The project has hence achieved a cost reduction of up to 40% in comparison to the current construction costs per sqm in Ethiopia.

Environmental considerations

The positive environmental impact consists of a reduced consumption of wood as no wooden formworks are used. By placing reinforcement directly into different types of hollow blocks or u−shaped blocks or by using

reusable metal formwork or pre−cast elements, wood consumption is extremely minimized.

By introducing a modular architectural system the number of different building parts is reduced, leading to a further reduction of different types of formwork.

Moreover the usage of local materials, whenever cost efficient, has a positive effect on the enviroment, because of less pollution through reduced transport.

Houses also have to be free of major maintance and repair work for 10 years and the life span is considered to be at least 50 years, reducing the negative impact on the environment and the national economy, that would otherwise arise from the need of rebuilding houses.

In climatically unfriendly areas with high day−temperatures and cold nights or high humidity in combination with high temperatures, the design approach will be adapted to this special climates to avoid extreme room temperatures. The use of air−conditioning can be avoided by appropriate climatically adapted housing designs. Hence the future consumption of electrical power and financial expenses can be reduced.

Appropriate neighbourhood planning is considered essential to create a healthy community. Waste water treatment planned and implemented on the level of the whole settlement reduces costs. It reduces also the pollution of the environment caused by poor maintance of individual septic tanks and soak−away pits. Re−usage of clarified waste water as fertilizer and for irrigation in urban agriculture will be considered in the future to properly use the ecological and economical potential of waste water.

The architectural designs and pictures of the construction process for two of the sites, Addis Ababa and Mekele, are shown in Figures 1−4.

Built Examples

A built example: the Addis housing type

(Row house/Alert Site)

FIG. 1

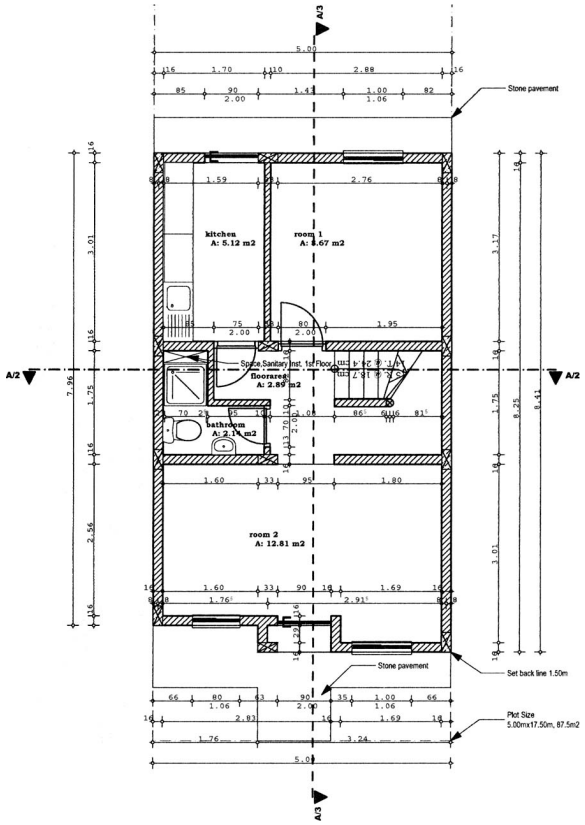

GROUND FLOOR, SCALE 1:100

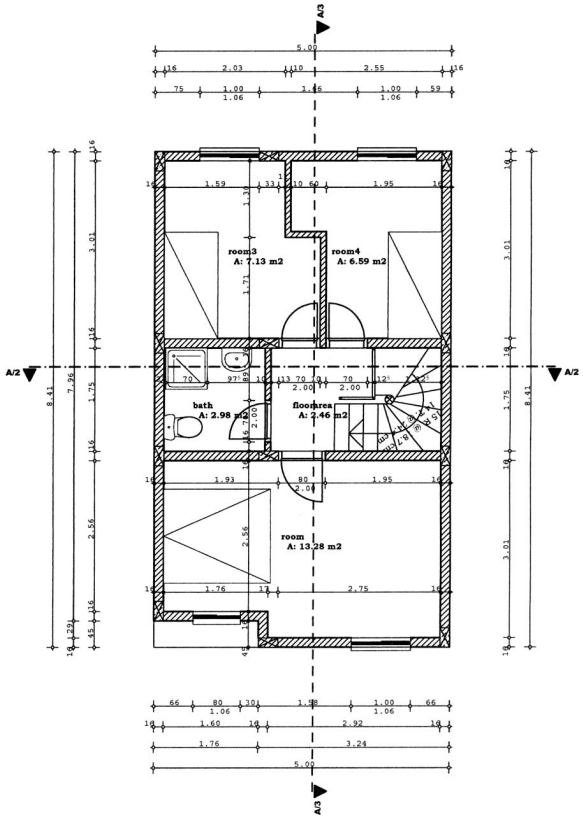

1st FLOOR, SCALE 1:100

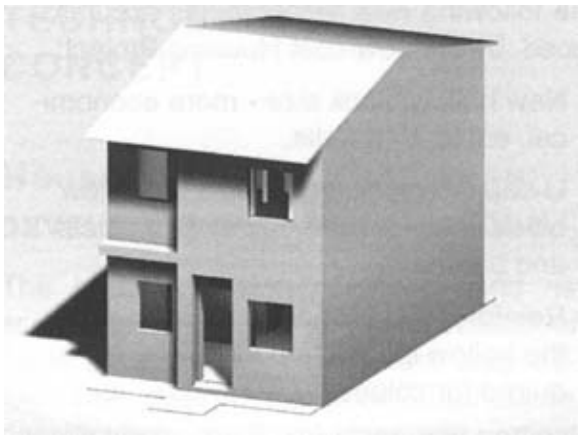

Street side view

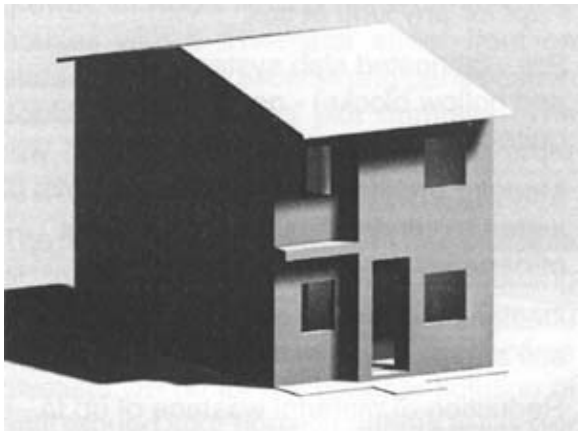

Street side view

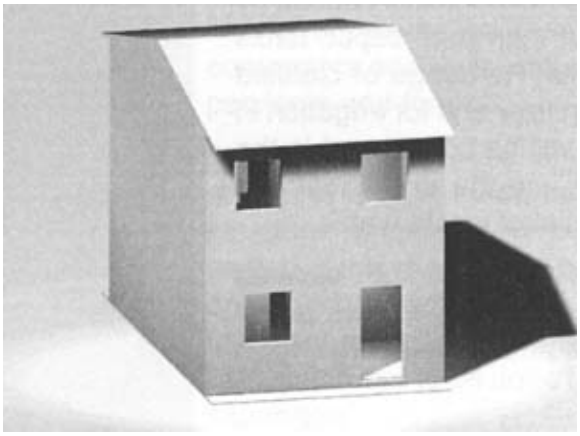

Back yard view

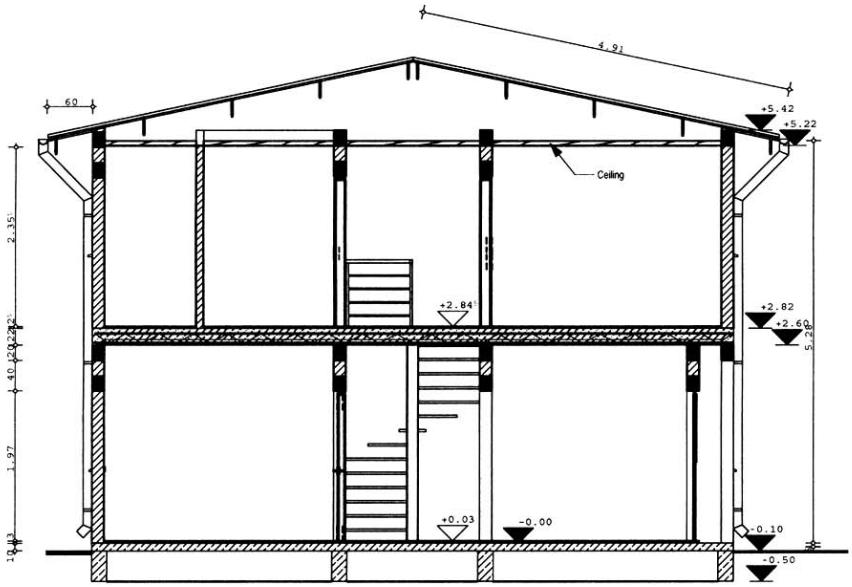

SECTION A/3, SCALE 1: 100

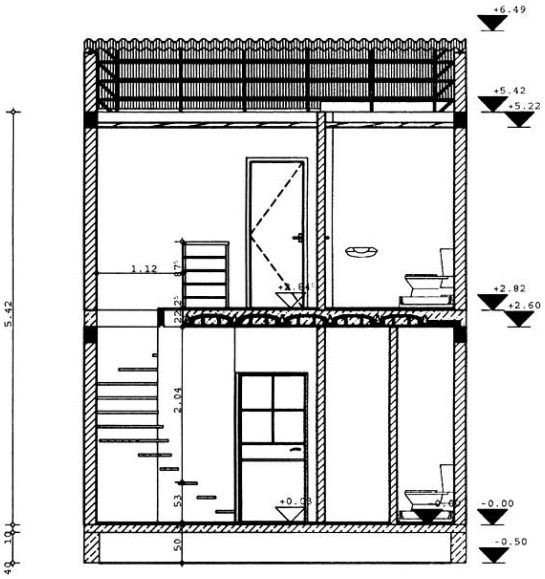

SECTION A/2, SCALE 1: 100

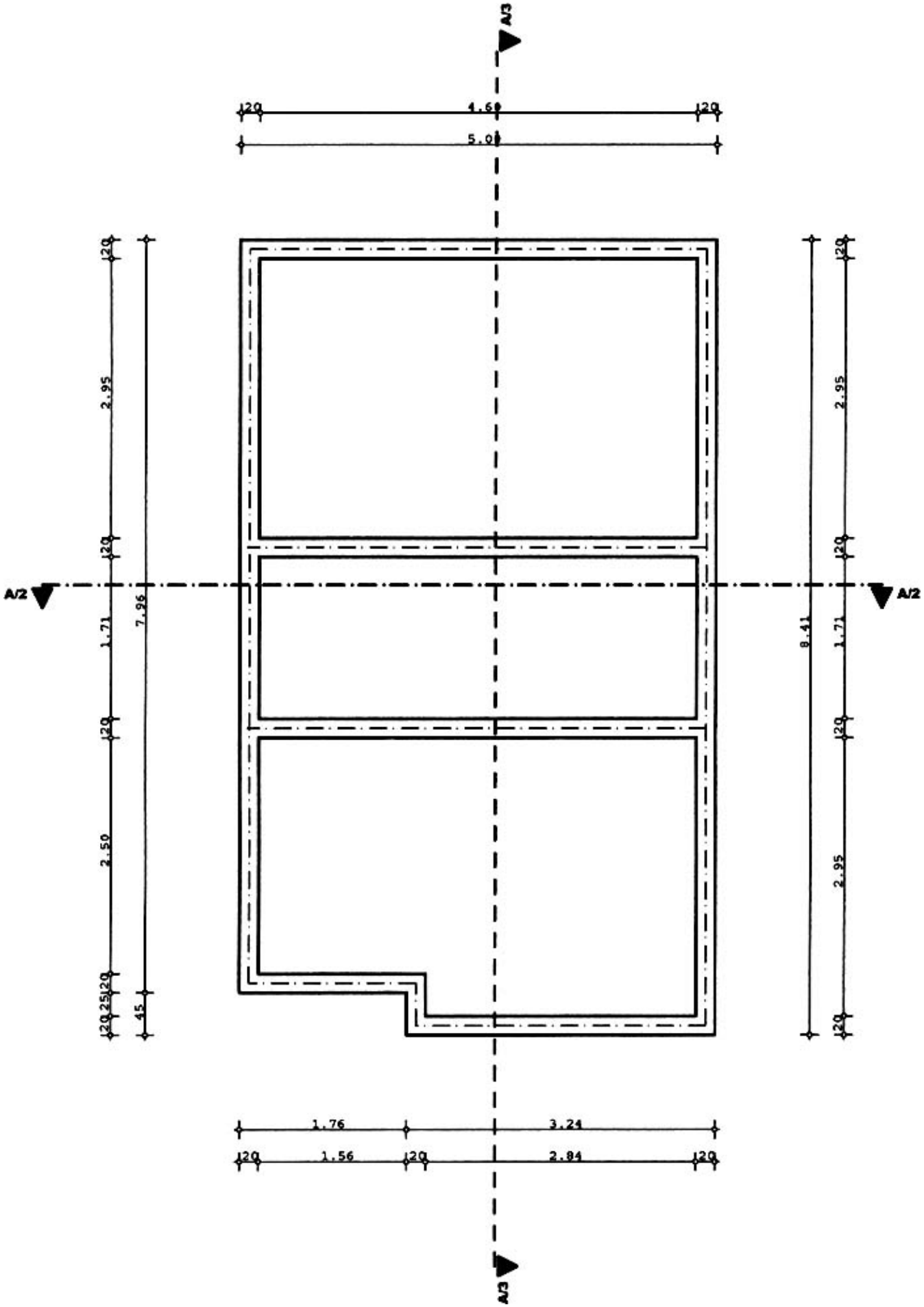

FOUNDATION, SCALE 1:100

Project's data:

- Row–house type, following the contour lines of the terrain to lower costs.
- Gross plot area: 15,251 sqm
- Total no. of units: 178 units
- Plot size per unit: 87,5 sqm
- Built up area per unit: 42,05 sqm

Addis housing type building process

(Alert Site)

FIG. 2
PICTURES FROM CONSTRUCTION PROCESS IN ADDIS ABABA

Levelling for the foundation is made

Preparation for combined strip and mat foundation

Construction of foundation using compactor

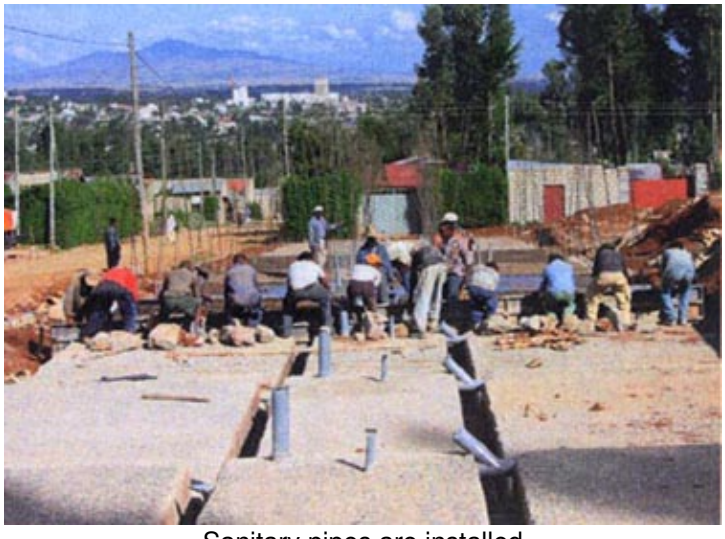

Sanitary pipes are installed

Ground floor finished, reinforcement for further walling, backyard view

Starting the upper floor, street side view

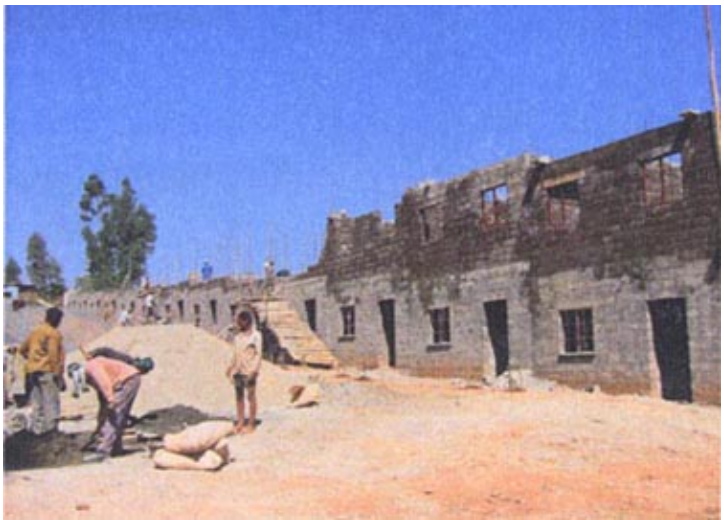

Finishing the walls of the upper floor, street side view

Finishing the upper floor, backyard view

A built example: the Mekelle "A" housing type

FIG. 3

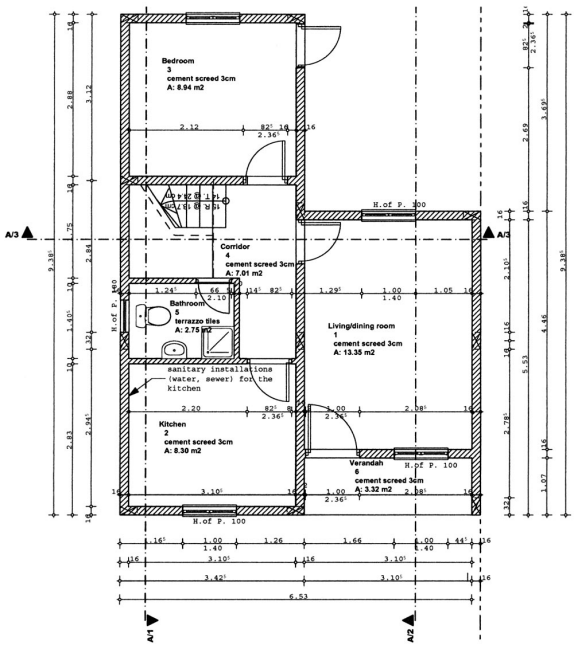

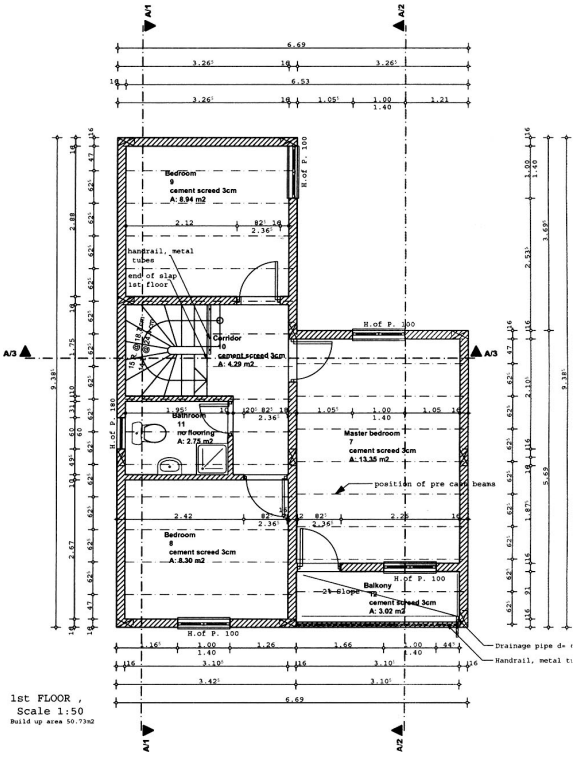

1st FLOOR ,
Scale 1:50
Build up area 50.73m2

GROUND FLOOR, SCALE 1:100

1ST FLOOR, SCALE 1:100

Street side view

backyard view

backyard view

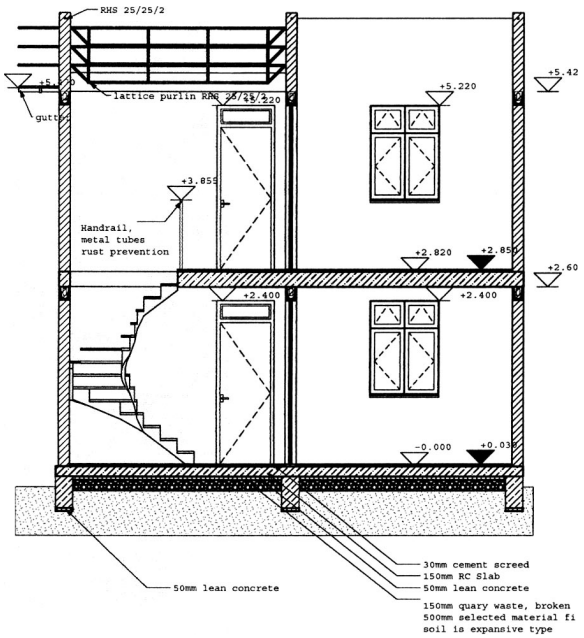

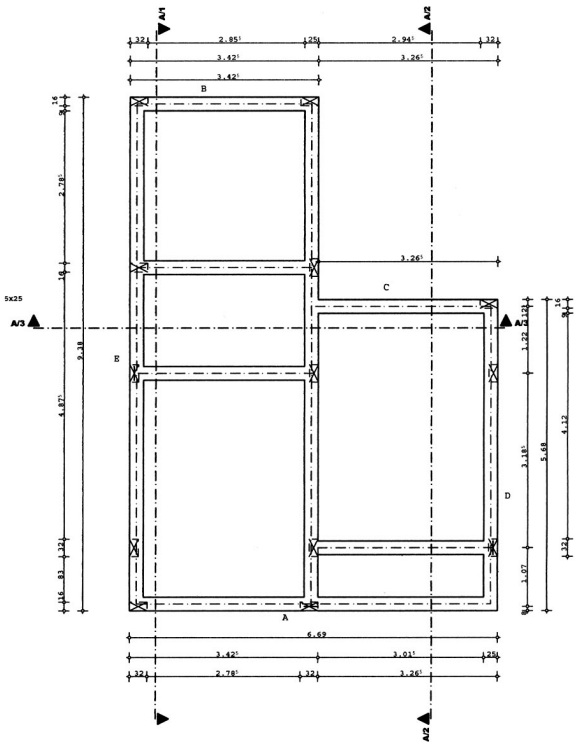

SECTION A 2, SCALE 1:100

FOUNDATION, SCALE 1:100

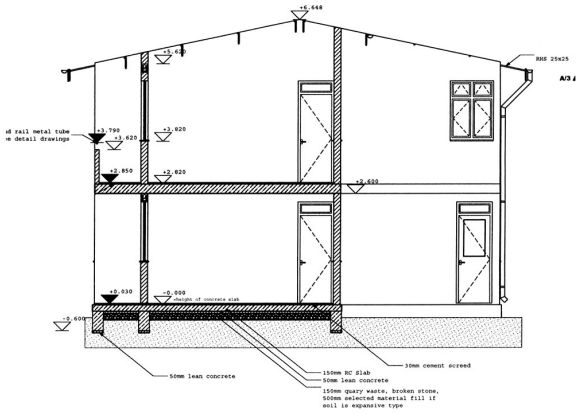

SECTION A 1, SCALE 1:100

Project's data:

- G+1
- Gross plot area: 0,872 ha
- Total no. of units: 50 units
- Plot size per unit: 170 sqm
- Build up area of 50,73 sqm

Mekelle housing type building process

FIG. 4
PICTURES FROM MEKELLE CONSTRUCTION PROCESS

Lost formwork for foundation

The finished foundation

Starting first floor

Starting the roof construction, street side view

Finished building

Street side view

Open spaces between buildings

Buildings are embedded into greenery, planted before

Design Basics

Basic measurements and masonry bond

FIG. 5
MEASUREMENTS

The construction of cost efficient houses requires reducing wastage of material. Reducing wastage depends on using modules which starts from the smaller parts like the masonry blocks and repeats themselves of longer scale of the whole housing unit.

The basic measurement system used in the project depends on a module of 32 × 19 × 16 cm (width × height × depth), being the outer measurements of one hollow block (HCB) unit.

Three types of measurements have to be differentiated (ref. to fig. below) and calculated as follows, considering a mortar joint width of 1 cm.

This system of measurement calculation has also been transferred to elevations and sections to do the height calculations.

– Full size:

Columns measurements have to be equal to the module size plus one mortar joint multiplied by the number of units used (n) minus one mortar joint.

For the calculation of ground floor plans' measurements are:
(32 cm + 1 cm) × n –1 cm

For the calculation of elevations' and sections' measurements are:
(19 cm + 1 cm) × n

– Full size plus one mortar joint:

Submissions length is equal to the unit size plus one mortar joint multiplied with the number units used (n).

For the calculation of ground floor plans' measurements are:
(32 cm + 1 cm) × n

For the calculation of elevations' and sections' measurements are:
(19 cm + 1 cm) × n

– Openings:

Opening size is equal to the module size plus one mortar joint multiplicated with the number of units used (n) plus one additional mortar joint.

In short, for the calculation of ground floor plans' measurements:
(32 cm +1 cm) × n + 1 cm

In short, for the calculation of elevations' and sections' measurements:
(19 cm + 1 cm) × n

In addition, one can calculate the outer measurements of masonry–bond building parts as follows:

– Overall measurement equal to the unit size plus one mortar joint multiplicated by the number of units used (n) plus one half module size.

For the calculation of ground floor plans' measurements are:
(32 cm + 1 cm) × n + 16 cm

For the calculation of elevations' and sections' measurements are:
(19 cm + 1 cm) × n

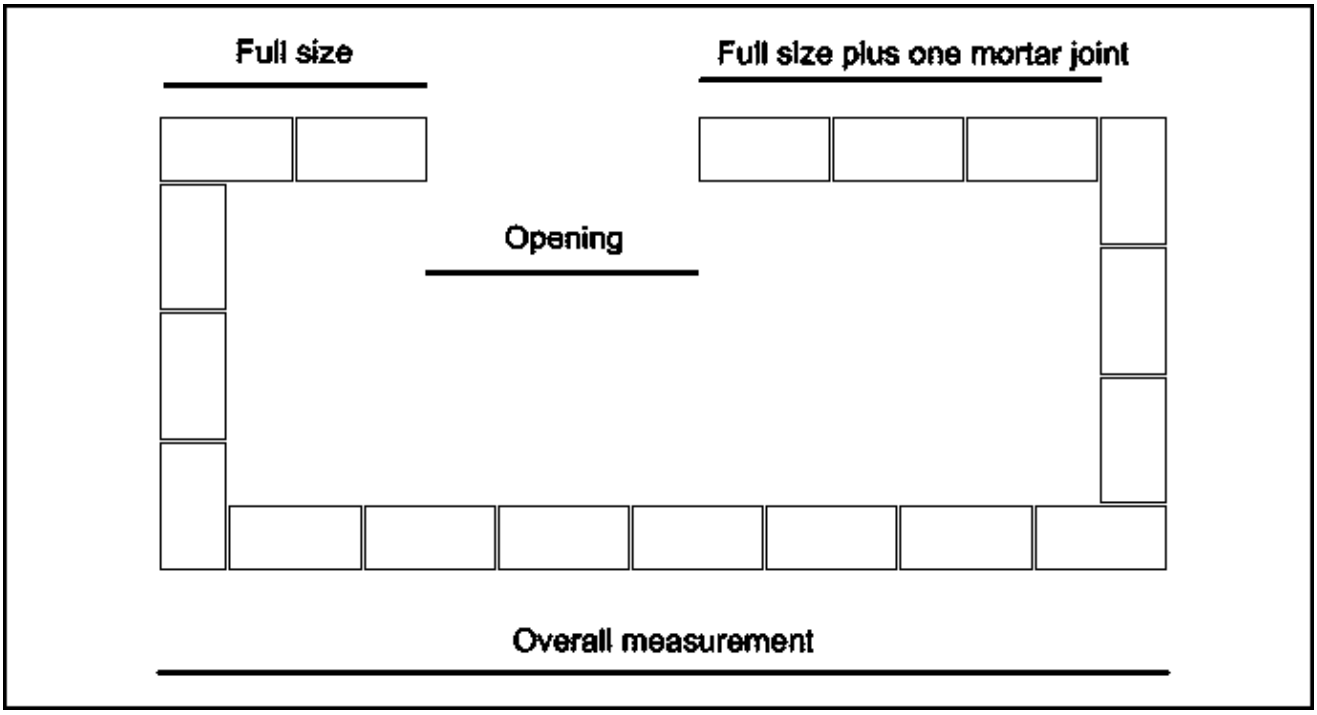

Scheme of different types of measurement for a ground floor plan shown as an example

Building Parts 1

Full HCB

FIG. 6
VIEW OF FULL AND HALF HCB

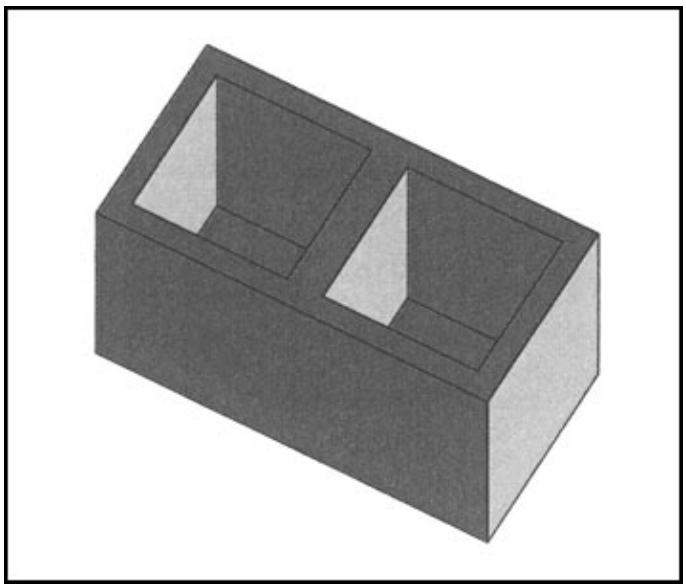

Full hollow block viewed from bottom

The full hollow block has a size of L=32 cm × W=16 cm × H=19 cm. This size of the HCB is reduced in comparison to the usual sizes used in Ethiopia. The new size of the hollow block reduces the production material and makes the HCB easier to handle, this reduces labour and material costs.

During the wall construction the hollow block is placed up with the closed bottom facing upwards. Therefore the loss of mortar during construction is reduced and the bond between HCBs is increased.

One mason can build 170 pcs of HCB per day on an average.

After wall construction, it has to be watered for at least 7 days.

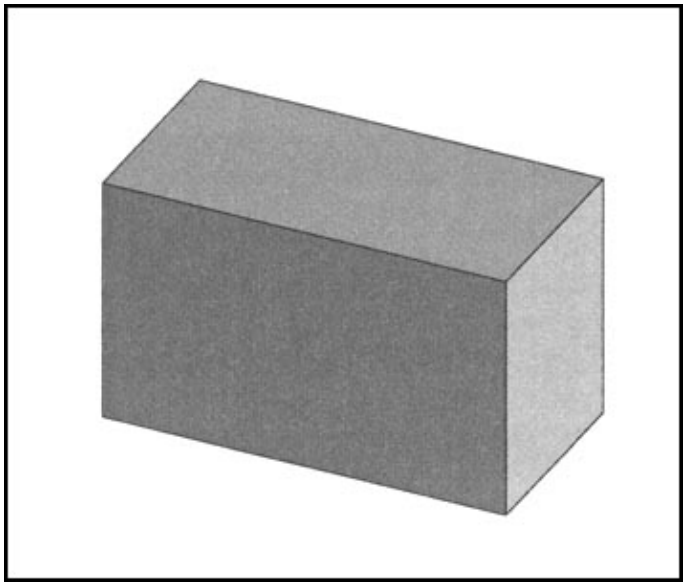

Full hollow block viewed from top

Half HCB

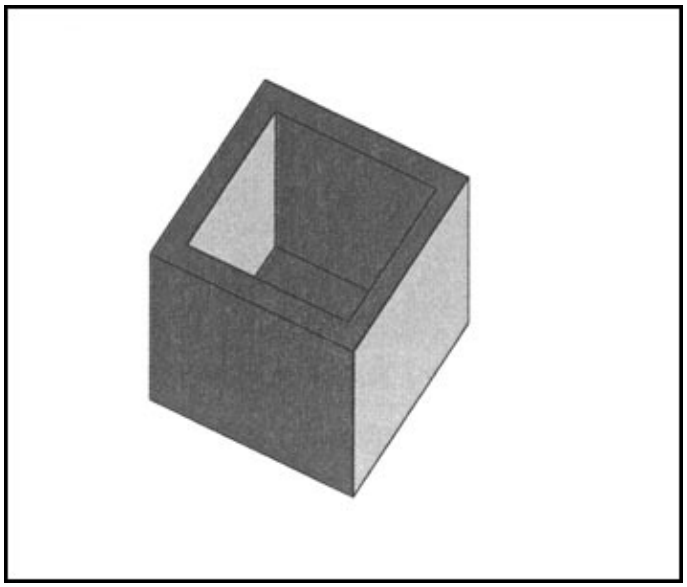

Half hollow block viewed from bottom

The half hollow block has a size of L=16 cm × W=16 cm × H=19 cm and represents exactly half of one full HCB.

Usage is similar to the full HCB.

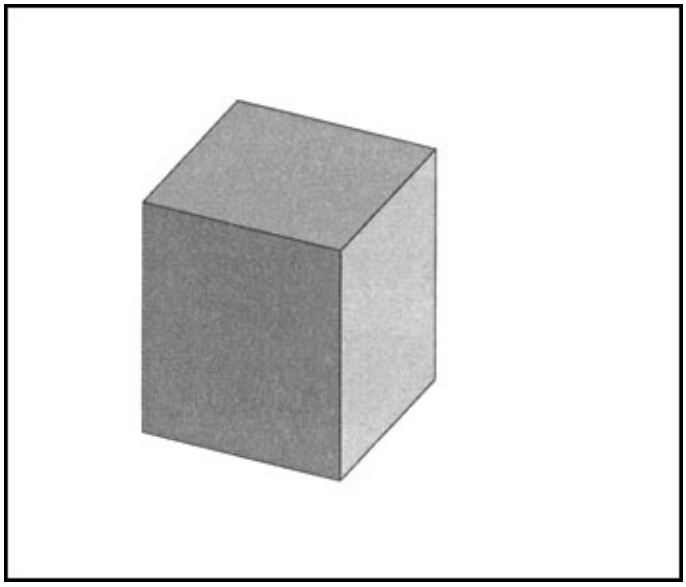

Half hollow block viewed from top

U–Shaped HCB

FIG. 7
VIEW OF U–SHAPED HCB

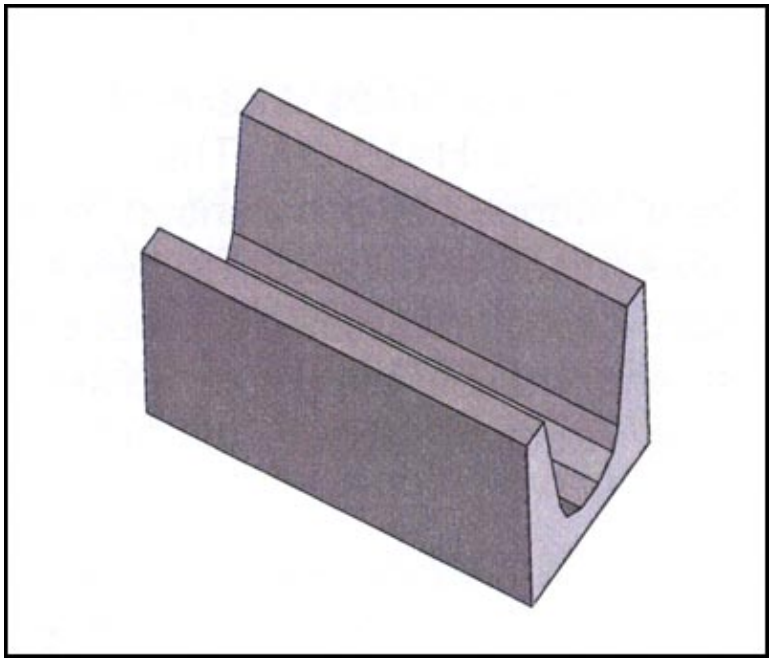

U–shaped HCB viewed from top

The U–shaped HCB has the same size as the full HCB; L=32 cm × W=16 cm × H=19 cm. It is used as a formwork for ringbeams & lintels and at the same time as a part of the wall.

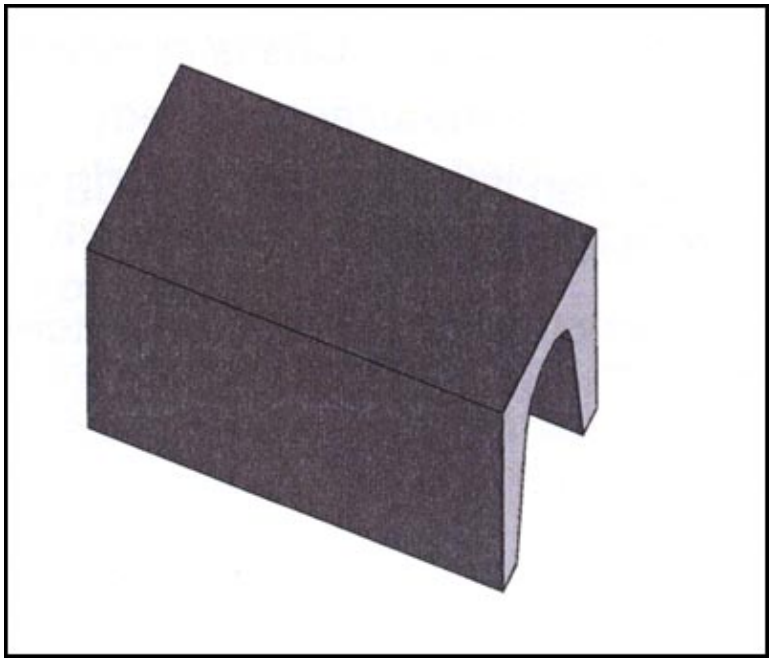

U–shaped HCB viewed from bottom

Lintels and Ringbeams made out of u–shaped HCBS

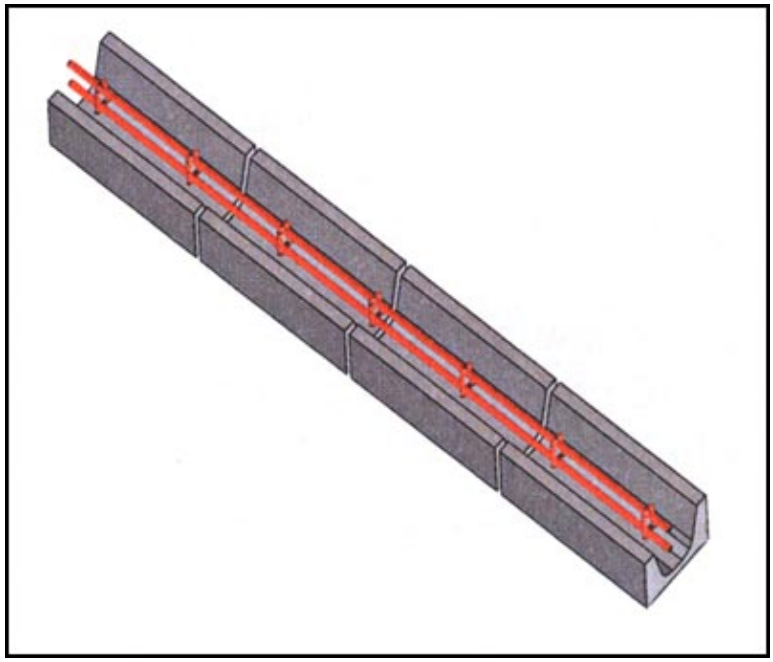

4 U–shaped HCBs joined together as a lintel with reinforcement

After the wall is properly erected the U–shaped HCB's are placed in at the hight of the ringbeam; the reinforcement bars and the concrete will be placed within the U–shape HCB according to the structural design.

Lintels will be prefabricated on a flat ground area in the same way as the ringbeams.

This technique avoids extra material for formwork.

The use of wooden formwork has negative effects on the environment. Moreover it requires skilled manpower and time to mantle and dismantle the form work.

The concrete used for filling has to meet or exceed C25.

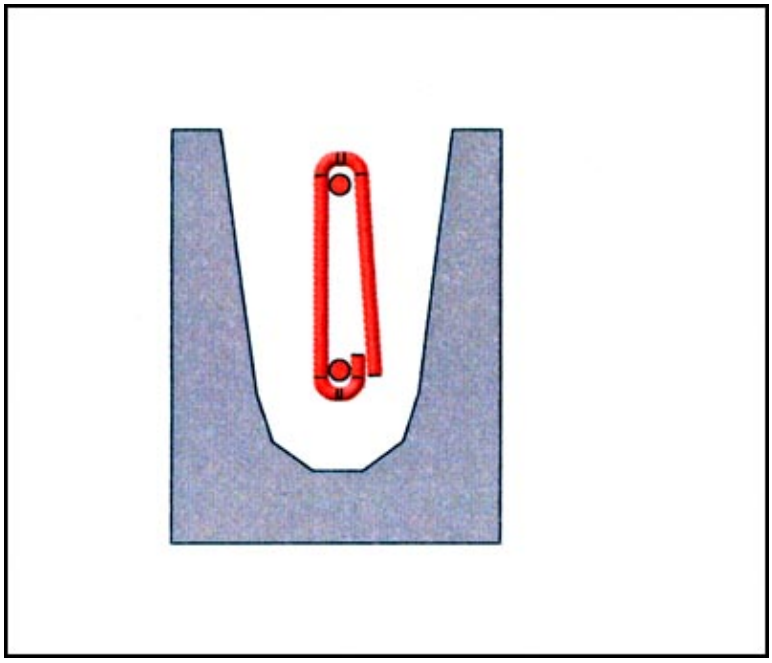

Section of HCB with typical placement of reinforcement

Column HCB

FIG. 8
SYSTEM OF COLUMN

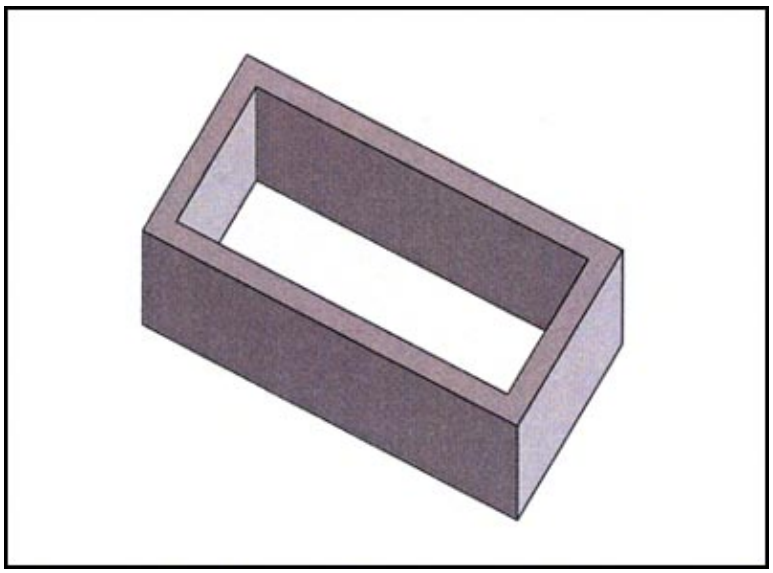

Column HCB viewed form top

The column HCB has a size of L=32 cm × W=16 cm × H=19 cm. It is used as a formwork for columns and at the same time as a part of the wall.

Columns made out of column–HCBS

After constructing the column out of column HCB's, one si
the HCB at the bottom of the column has to be opened to
remove the mortar that has fallen down during walling up.
has to be done to ensure a reliable connection between th
cast–in concrete and the slab foundation.

After walling up, the column is cast with concrete.

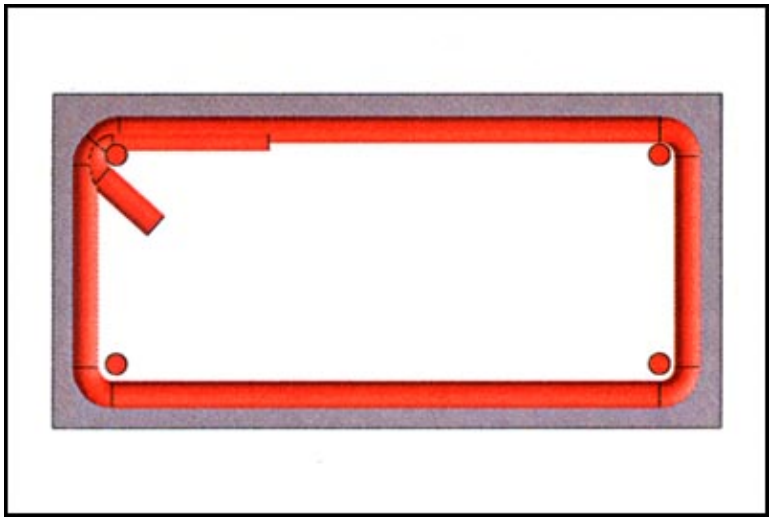

Column HCB with reinforcement

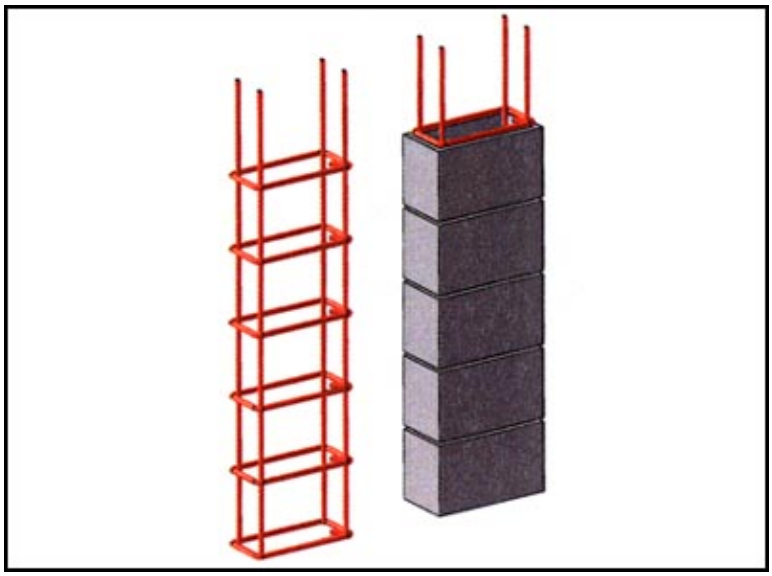

Column HCB with reinforcement

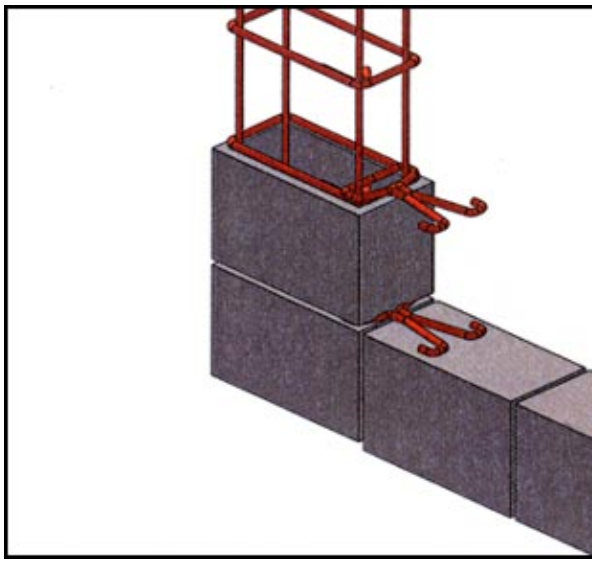

Connection inbetween column and w

Slab HCB

FIG. 9
SLAB HCB

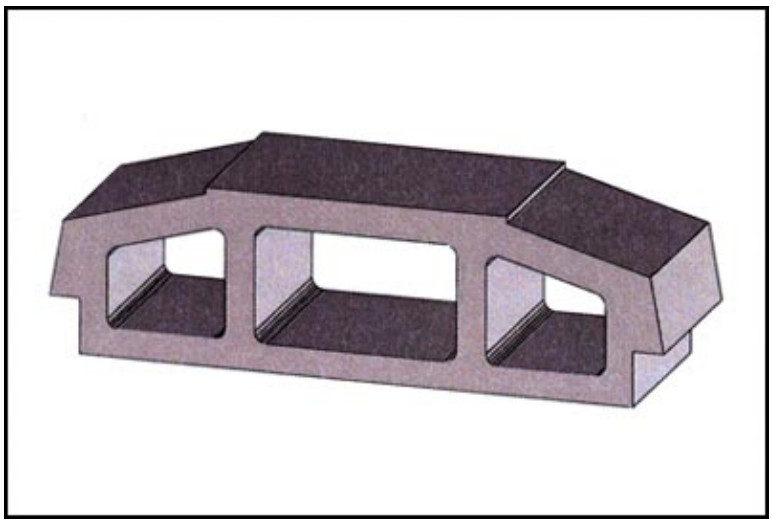

The slab HCB viewed from top/side

This slab construction system, introduced by the Low–cost Housing Project, avoids formwork, reduces requirements of skilled manpower and time. The system has two major components: the pre–cast beam and the slab HCB.

The production of the slab HCB is done in the same way as production of wall HCB.

Basic Techniques Use and Description of Machinery and Tools 1

Hollow Concrete Block (HCB) Production

FIG. 10
HCB PRODUCTION

The machines used to produce HCBs are electrical vibrating machines which have 1.5 HP motor to make sure, that the vibration is strong enough to compact the concrete sufficiently in the moulds and to achieve the required strength.

Before starting production the different materials used to produce the HCB will be dry−mixed thoroughly on a clean and dry ground by hand. Then the mixture will be put in the mixer with the appropriate ammount of water required (water to cement ratio of 0.49 – 0.55). The mixture is inserted into the mould and vibrated for about 60 seconds before extruded as HCBs.

Except for the slab−HCB, the machines can produce three pieces at a time. The HCB ise transported by two people on a wooden pallet. The HCB remains on the wooden pallet for 24 hrs. Then it is be cured covered by a plastic sheet to enhance the curing process and preventing the water from evaporation.

Curing−time is at least 10 days before using the HCBs for construction.

It is important to write the date of production on the HCB so that the mason can easily identify the HCBs, ready for construction.

The materials required for the production of HCBs and their mixing ratio differs from site to site depending on the availability of the building materialsand the ratio that fulfils the required strength. This holds true for all types of HCBs production.

The average overall production is 1200 HCBs per day per machine.

The pictures show machines, used by LCH−Project.

The mould viewed from the top

The machine used for the production of HCBs

Filling in concrete while the machine is already vibrating

Concrete is filled up during compacting until the molde is filled

Removing the mould upwards

Clearing the top

Mortar and masonry work considerations

FIG. 11
MORTAR & MASONRY WORK

Mortar should be used economically.

Therefore it is put on the top of the previous layer of HCBs in approx. 2 cm height. It has to be spread to the edges properly. A plain piece of wood helps to prevent the mortar from falling down. The upper surface of the mortar has to be rather rough to get a proper connection between the HCBs and to allow the mortar to spread into the holes of the upper HCB. It has to pressed down until the height of the mortar is reduced to 1 cm.

Walls constructed in this way can be considered as load bearing walls.

Mortar quality

The mortar used for walling up all types of HCBs has to be tested. The minimum pressure resistance of the mortar mixture has to be 170 Kg\sqcm or higher on the 7th day.

Putting the mortar on top of the last layer

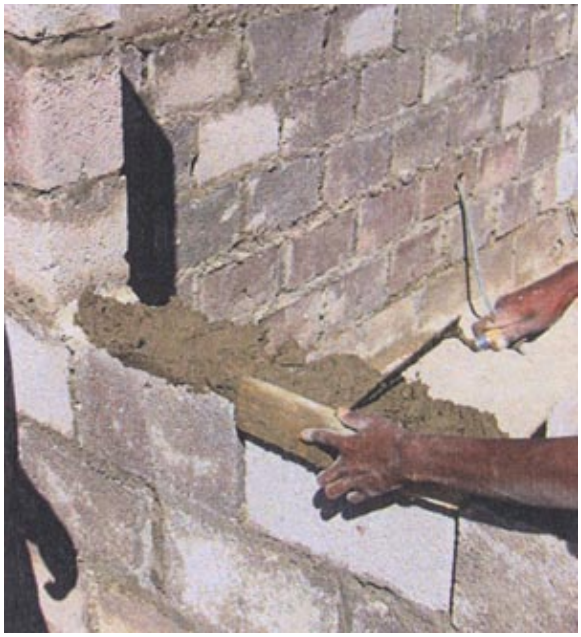

Spreading the mortar to the edge, using a piece of wood

Section showing mortar spreading into holes of the HCB

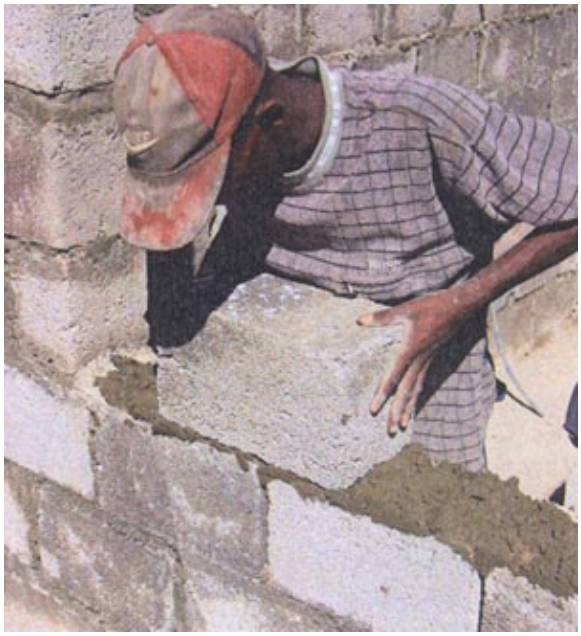

Placing the HCB with the closed bottom up

Settlement area in Mekelle

The same construction method is used for Ground + 1 Houses (Mekelle) and Ground–floor houses (Bahir Dar). The system allows also the construction of multistory buildings. The cost efficienty is even higher in multistory buildings, while the construction time can be shortened and the material wastage will be considerably reduced.

Construction of Houses in Bahir Dar

Building Parts 2

Precast beams

FIG. 12
PRECAST BEAM

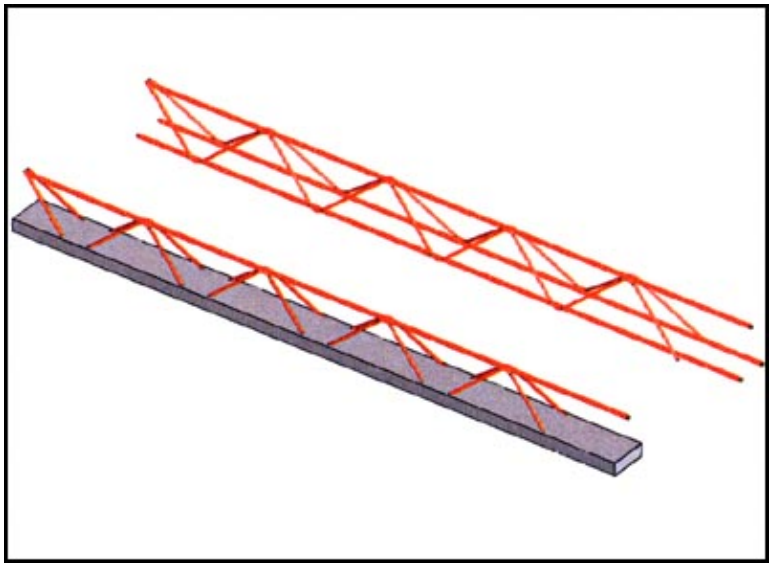

The pre−cast beam (bottom) and the reinforcement itself (above)

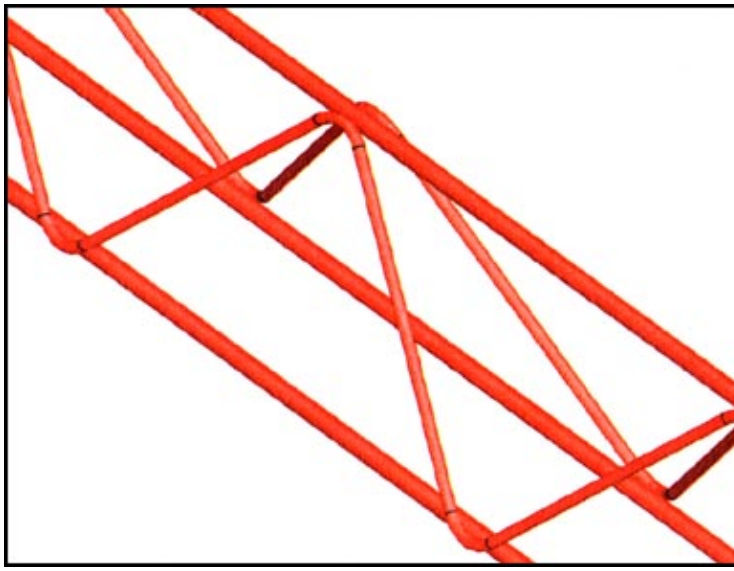

Detail of the reinforcement

In the pre−cast beam production, the reinforcement has to be properly bent. Especially for the stirrups, the diameter for bending has to be 4 times greater than the diameter of the stirrup itself.

The stirrups must be welded at the top with the main reinforcement.

The pre−cast beam is then casted by using a mould and a vibration table so that the concrete is well compacted. The beam production and transport to the place where it is going to be cured can be done by four people. (ref. to figs. on page 17)

After having finished the production of the components, five labourers can do the proper laying of the pre−cast elements and slab HCB in one day.

Considering 40 sqm of slab, the temperature reinforcement, the electric and sanitary lines and also the formwork around the slab can be done within 2 days.

One can start the construction of the walls on the slab three days after casting of the concrete.

With the usual method one has to wait 21 days without dismantling the formwork hampering the activity that could be done above or below the slab.

Basic Techniques Use and Description of Machinery and Tools 2

Bending reinforcement for precast beams

FIG. 12
PRECAST BEAM

Bending of reinforcement can quickly be done by using formwork consisting of a metal plate with bolts welded on it.

The bolts must have a diameter corresponding to the minimal bending radius of the used reinforcement−bars.

Normally the diameters of the bolts have to be four times bigger than the diameter of the bars used.

After the stirrup is formed over the length of the mould, the stirrup can be put off and re−fitted so that any length of stirrup can be produced.

Forming the stirrup

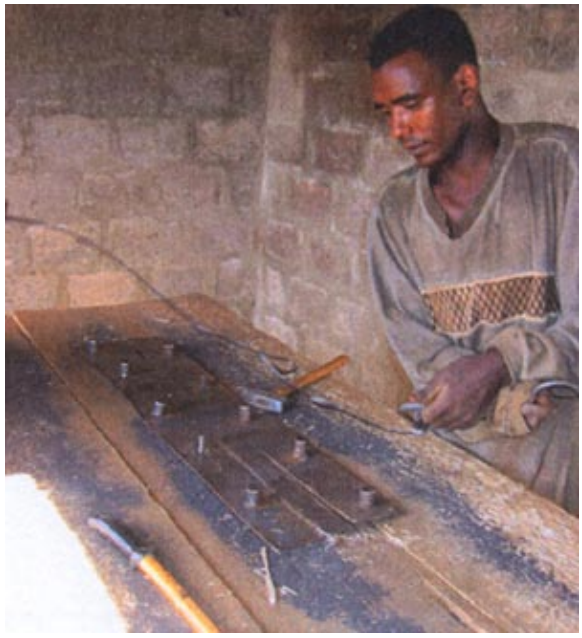

Removing a finished segment

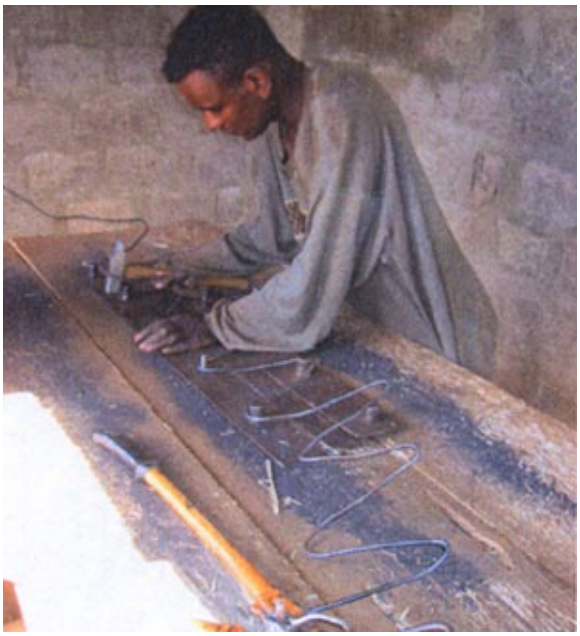

Starting the new segment

Model of the formwork with ready–bent stirrup on it

Vibrating table

FIG. 13
VIBRATION TABLE

The vibrating table is used during casting of the concrete for the precast–beams.

It consists of the vibrating–machine, which is similar to the one used for HCB–production, and a metal table as shown in the drawings below.

The table is trussed at the edges by four billiard balls lying in hollows to enable it to move horizontally free.

In addition, a mould is used to cast seven beams at once. It is also shown in the drawing below.

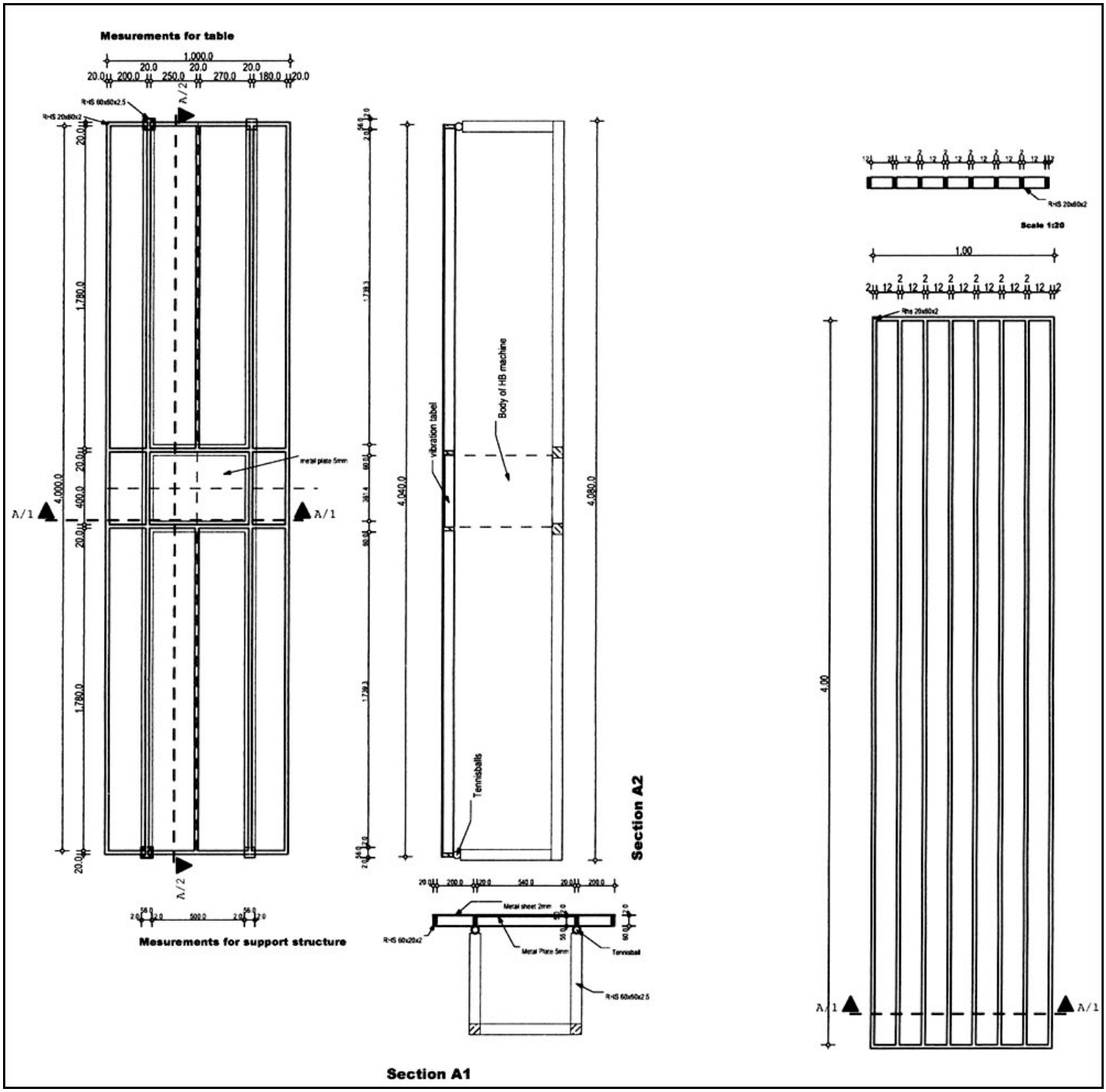

Drawings of the vibrating table

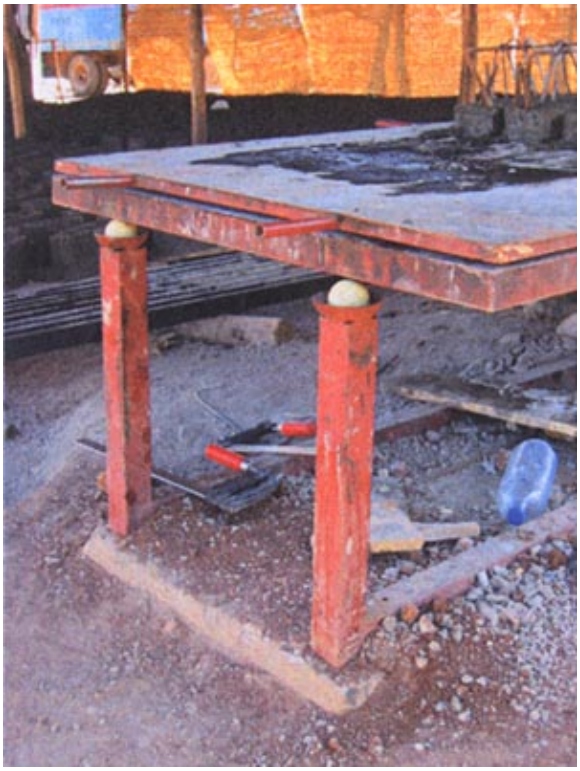

Supports with billiard balls

Filling in concrete by hand

The vibrating–machine

Spreading the concrete, using a bend bar

Mould for the pre−cast beams

The precast−beams after removing the mould

Hooks for holding parts of formwork together

FIG. 14
HOOKS FOR FORMWORK

Clamps are used to hold parts of formwork together.

One side is rounded and tapered to make insertion into the drill−hole easier. The other side is bent by 180 degrees and flattened. This side of the clamp provides a pressure on the parts of the formwork to hold them tightly together.

a clamp

Inserting the clamp into a drill−hole of the formwork...

... And locking it by rotating it by 90 degrees

Four clamps mounted in edge–position using an angle bar

Two clamps mounted on formwork for foundation

Formwork for foundations and slabs

FIG. 15
FORMWORK

The formwork for foundations and for slabs is the same. It consists of a metal panel with a frame welded on it to achieve stability. The frame has got drill–holes for the clamps.

In conjunction with angle bars, two pieces can be used to form an edge. They can be mounted side by side or on top of each other.

A formwork for a slab, fixed by additional wires bound to the reinforcement of the slab

The edge of a formwork–assembly for foundation

A formwork for foundation, panels mounted on top of each other, side by side and at the edge

The Manhole

FIG. 15
FORMWORK MANHOLE

There is also a formwork for the manholes. It consists of four metal side–panels, two plastic pipes and a rectangular pot. The side–panels are fixed by four angle bars in the corners using clamps as described above. The pipes are fitted on different levels, so that back pressure can not reach the intake.

The pot is slightly tapered and has a groove at the bottom to form a chute for the future catch drain.

All parts are treated with waste oil to make removal easier.

One has to be sure to make the pit for the manhole big enough to be able to draw out the pipes after casting the concrete. Moreover, one has to foresee enough space in the pit for 3 persons to place and remove the formwork.

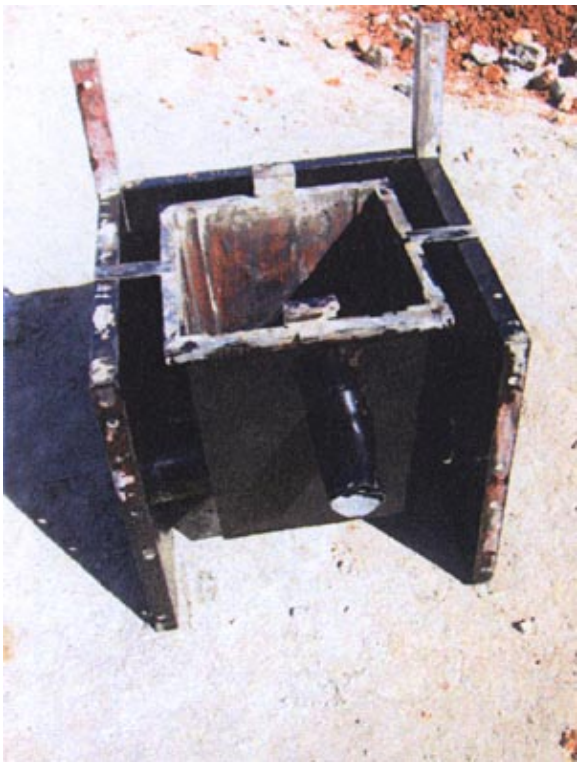

Formwork for the manhole, viewed from the side of intake (front panel removed)

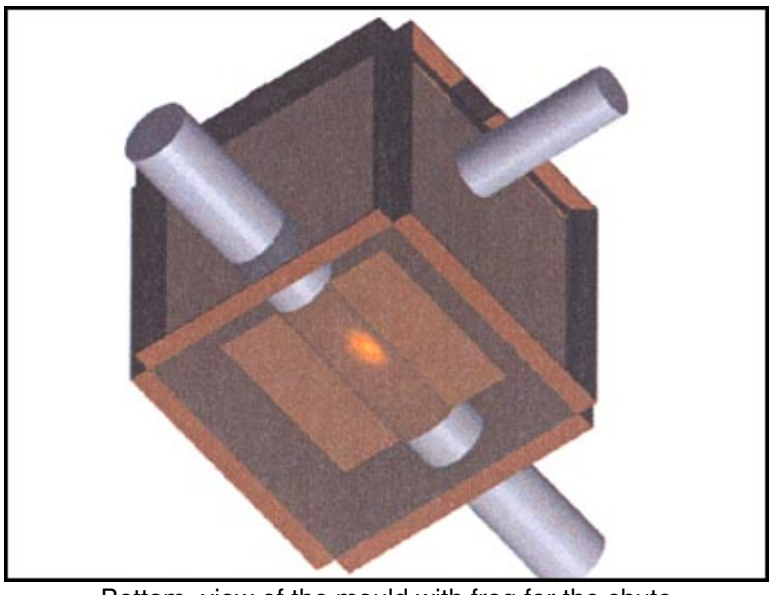

Bottom–view of the mould with frog for the chute

The mould viewed from the side of the catch drain (front panel removed)

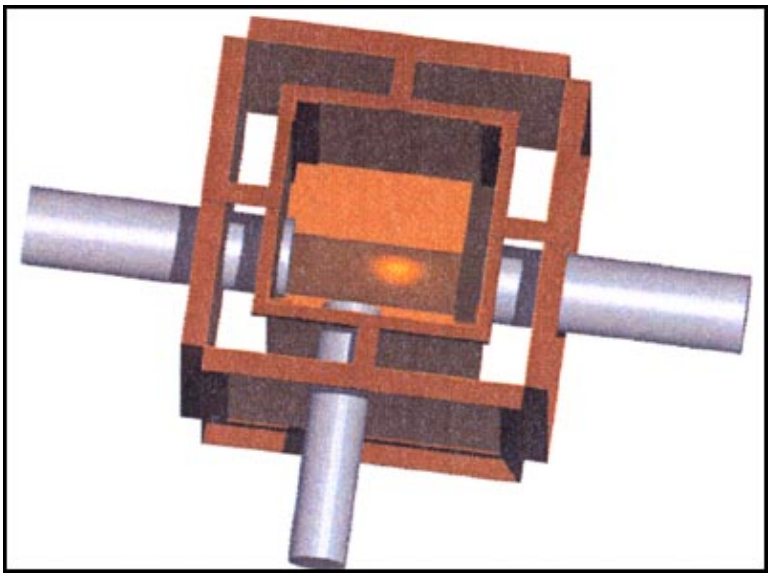

The frog for the chute viewed from top

Viewed from top (panel of intake–side removed)

Concrete spacers for fixing position of reinforcement

FIG. 17
CONCRETE SPACER

In the execution of foundations and slabs concrete spacers are used to hold reinforcement in position and to assure the required cover. Cast–in wires are used to fix them to the reinforcement bars.

The spacers are produced using a metal mould. Concrete is filled in and during compacting with the vibrating table, the wires are inserted.

The cast manhole

The pit for the manhole

The concrete spacers with wires for fixing them

The manhole covered with a precast lid

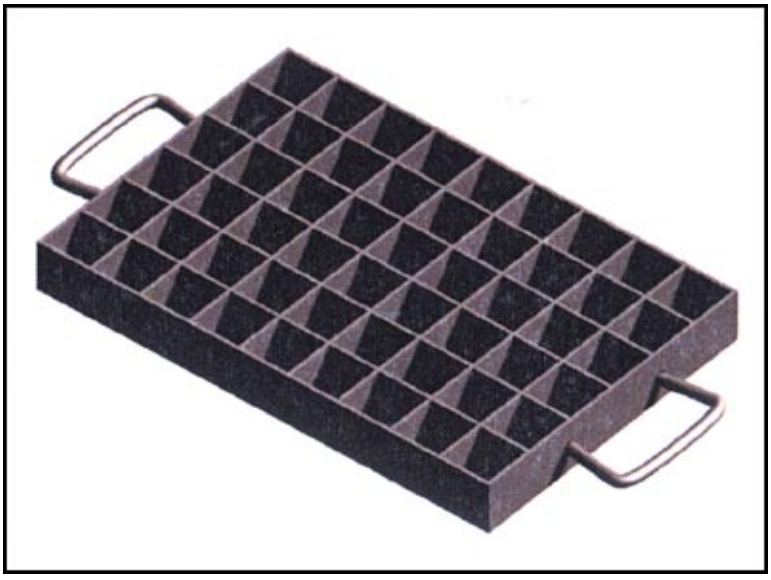

The mould for the concrete spacers

Construction Process

An exemplary construction process

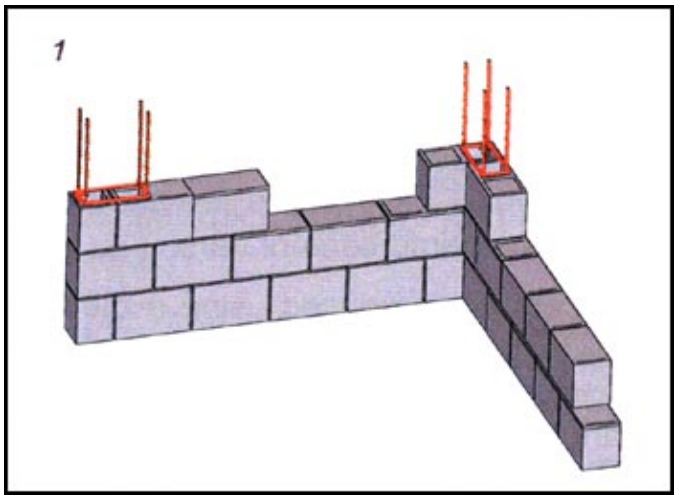

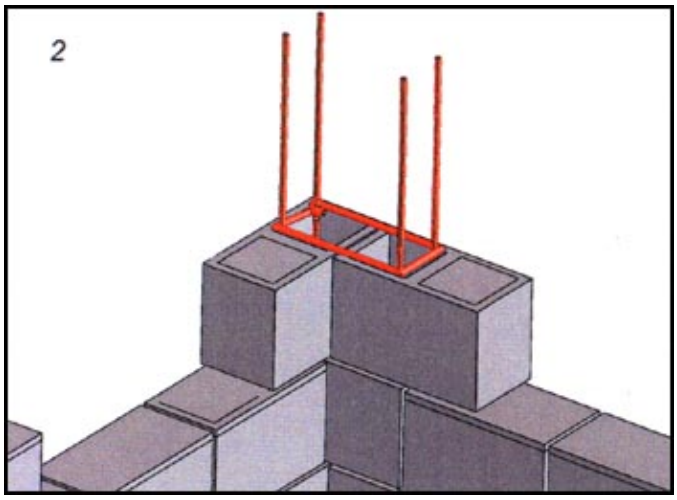

The following describes, how an exemplary construction process is implemented, using the building parts mentioned before.

During walling up, the columns are integrated into the wall by using column HCBs. The positions of the columns has to be calculated by a structural engineer. The structural design depends for example on the number of storeys to be built and the possibility of earthquake exposure.

Reinforcement is placed inside the column HCBs. After 10 layers of HCBs are erected they have to be filled with concrete C 25.

Stirrups are placed within the mortar joints as shown in the drawings.

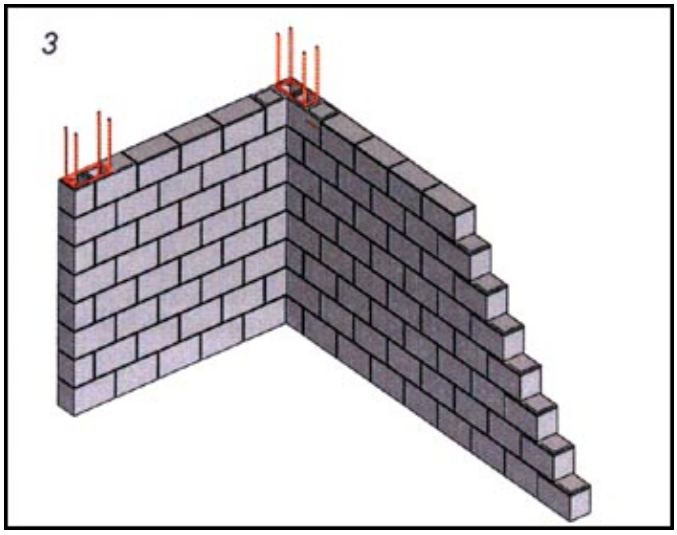

When the wall is erected, a ring–beam has to be fixed. Therefore U–shaped HCBs are used as part of the wall and even as formwork for the concrete.

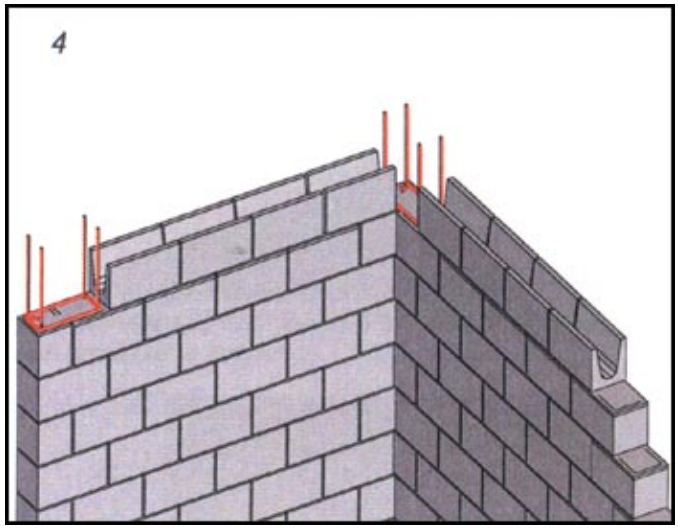

U–shaped HCBs are placed on top. Where the reinforcement of the columns is placed, the bottom of the U–shaped HCBs have to be cut. The reinforcement bars of the columns have to be bound into the reinforcement of the ring–beam. The overlap length of the column reinforcement has to be at least 80 cm.

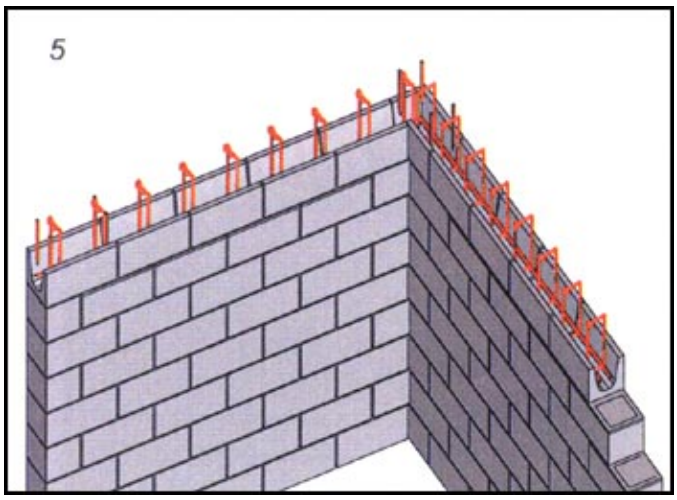

Reinforcement bars are laid into the U–shaped blocks.

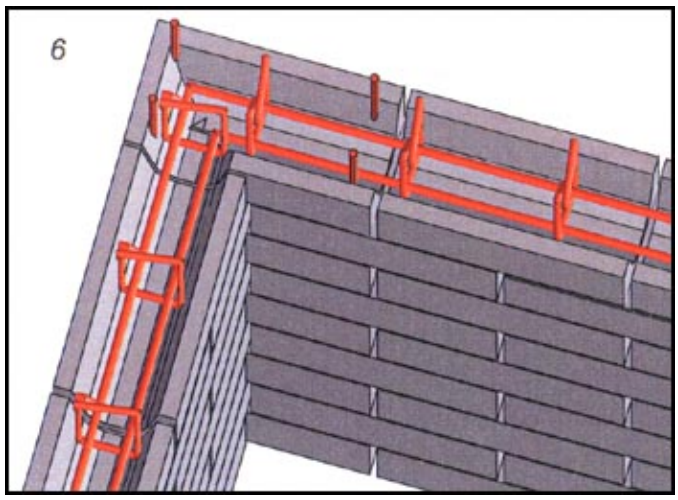

Stirrups are placed every 20 cm. The length of these stirrups depends on the height of the slab to be built and has to be designed by the structural engineer.

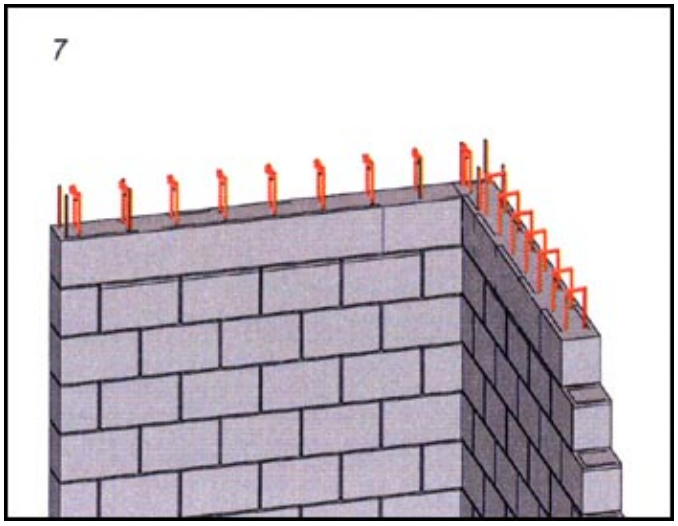

The U–shaped blocks are filled with concrete, min. quality C25.

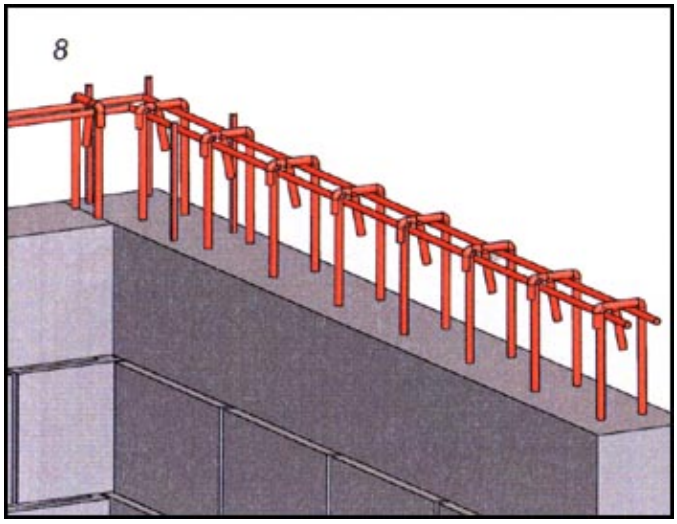

The upper reinforcement parts for the slab are placed in position.

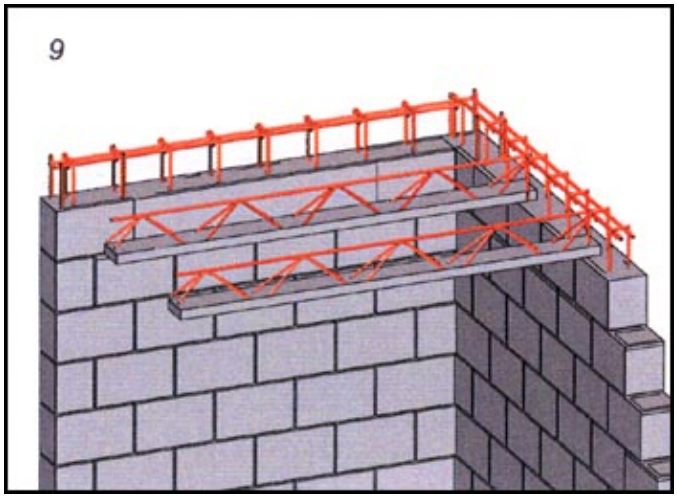

In a next step, precast beams are laid upon the ring–beam. The distance between the beams results from the width of one slab–HCB at its bottom plus a tolerance of 0,5 cm on both sides. That means clear distance between beams of 50,5 cm.

The distance between the ring–beam and the first beam has to be 47,5 cm resulting in an overlap for the slab–HCBs of 3 cm.

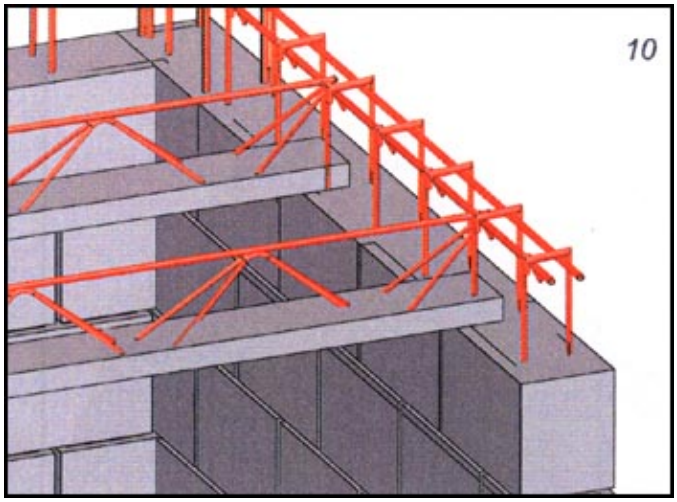

Overlap at the end of beams over the ring–beam has to be at least 10 cm.

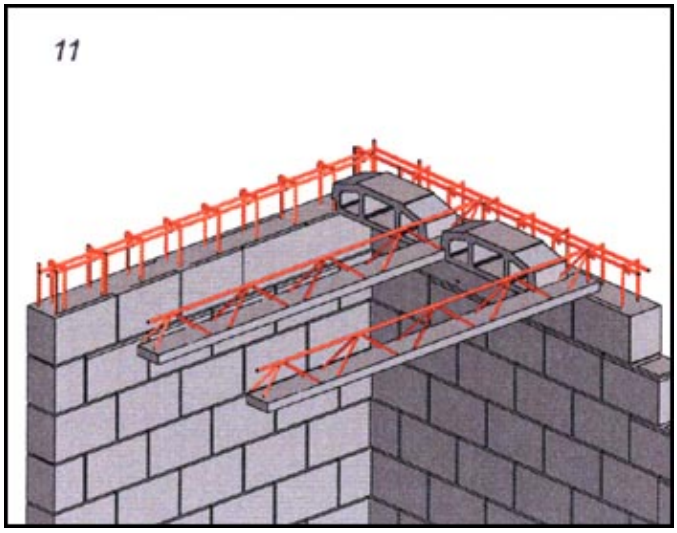

The slab–HCBs are placed between the beams or between beam and ring–beam.

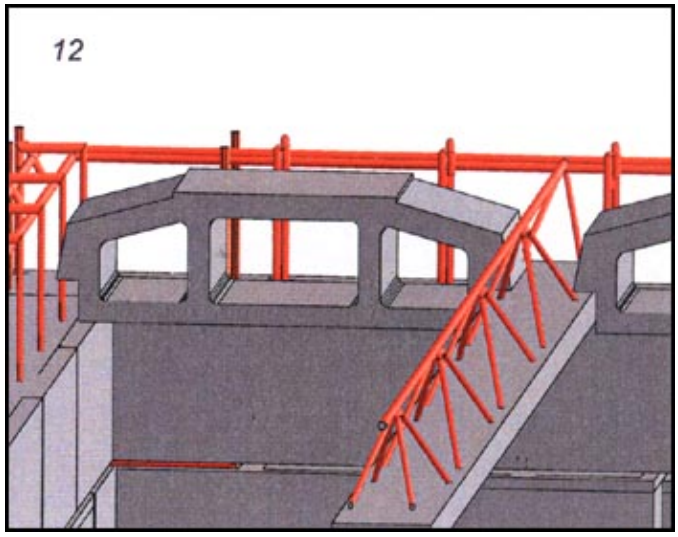

One has to be sure of the proper placement of the slab HCB.

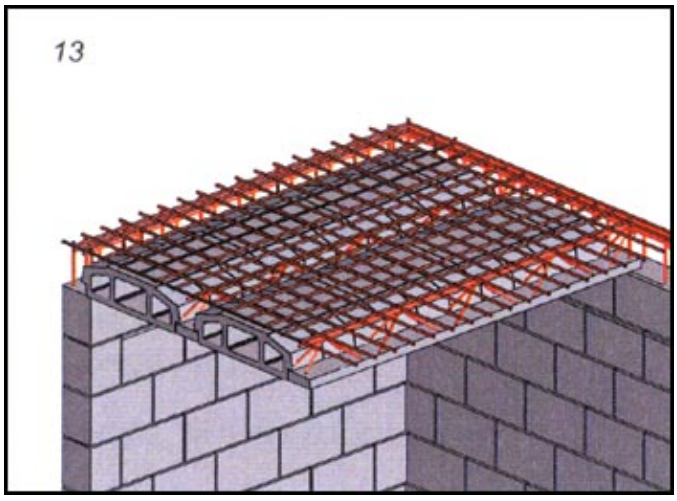

When all slab–HCBs are placed, the result will be also a formwork for the concrete–filling of the future slab.

A temperature reinforcement is to be laid on top of the HCBs with properly bent hooks at the ends of the reinforcement bars. The diameter of the reinforcement bars is 6 mm.

Formwork panels are placed at the outer edges of ring–beams to complete the formwork.

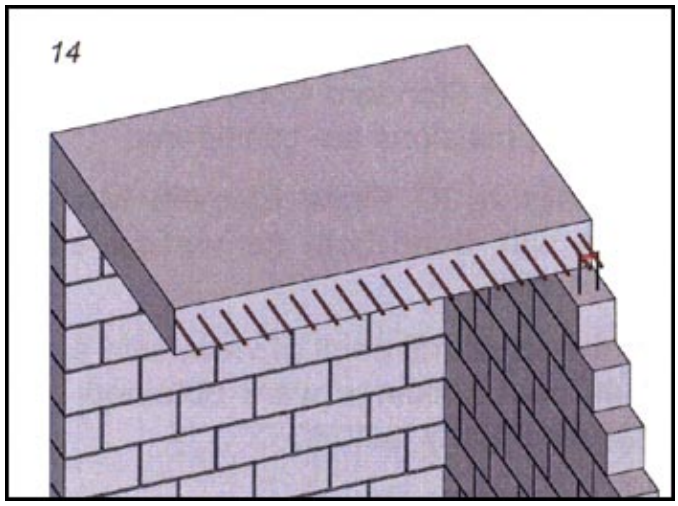

Concrete filling is done on top of beams and slab–HCBs. The quality has to be at least C25.

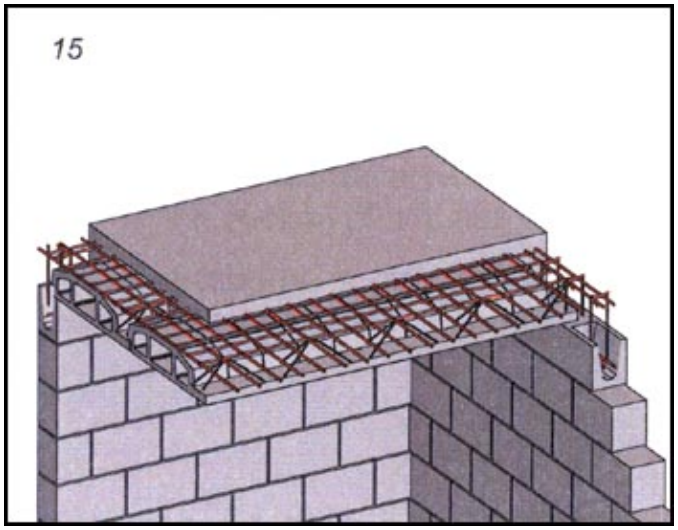

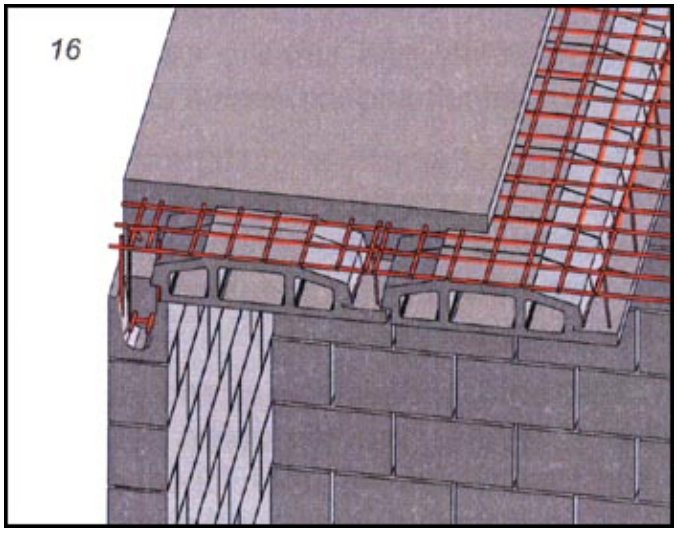

These drawings are schematic drawings of the final construction. A part of the slab's concrete filling is cut away to illustrate the position of reinforcement and slab–HCBs within the concrete filling.

Structural Design

Structural design

The structural design for the project was done with the main aim of providing safe and cost efficient housing.

The Ethiopian Standard Code of Practice, ESCP–95, provisions are considered.

Additionally a 3D Finite Element Model analysis was done both for vertical and seismic loads.

From the structural point of view, safe and cost efficient buildings were obtained by considering many factors.

The major factors are:

Pre cast beams and HCB rib systems are used to avoid slab–/beam formwork and to reduce the number of skilled carpenters.

For up to G+1 buildings no column formwork is required as the columns are embeded in the Concrete Hollow Blocks.

Modular structured elements are used to simplify work and production of pre cast beams and Concrete Hollow Blocks.

Simple structural systems are used to ensure safety and stability without requiring difficult and expensive details.

An optimal structural system and layout is used to reduce cost without compromising quality. The optimal system is chosen after making trial and error with many alternatives.

Different foundation types and embedment depths are considered and the one that is optimal from function and cost aspects is selected and adapted.

The reduction of construction time is achieved by using simple pre cast systems which were instrumental in reducing cost and enables better quality control.

Analysis of Slab

The slab is made of precast beam systems that are used together with hollow blocks. The pre cast beam is spaced at an interval of 625 mm.

Topping Reinforcement

The topping is a one way slab that is supported on the precast beams.

Taking a one meter strip and analyzing the slab it could be shown that the area of steel to be provided is minimum. The shear should also be checked because of local shear developments due to small slab depth.

The maximum shear developed vmax = pd/2 is checked against the capacity of the section and it is determined whether shear reinforcement should be provided or not. In the present example no shear reinforcement is provided since the applied shear is less than the capacity of the section.

Minimum reinforcement from the code suggests that a reinforcement mesh providing in each direction a steel area not less than 0.0167 of the section of the slab.

A typical section of a slab with minimum reinforcement is shown in FIG–1s.

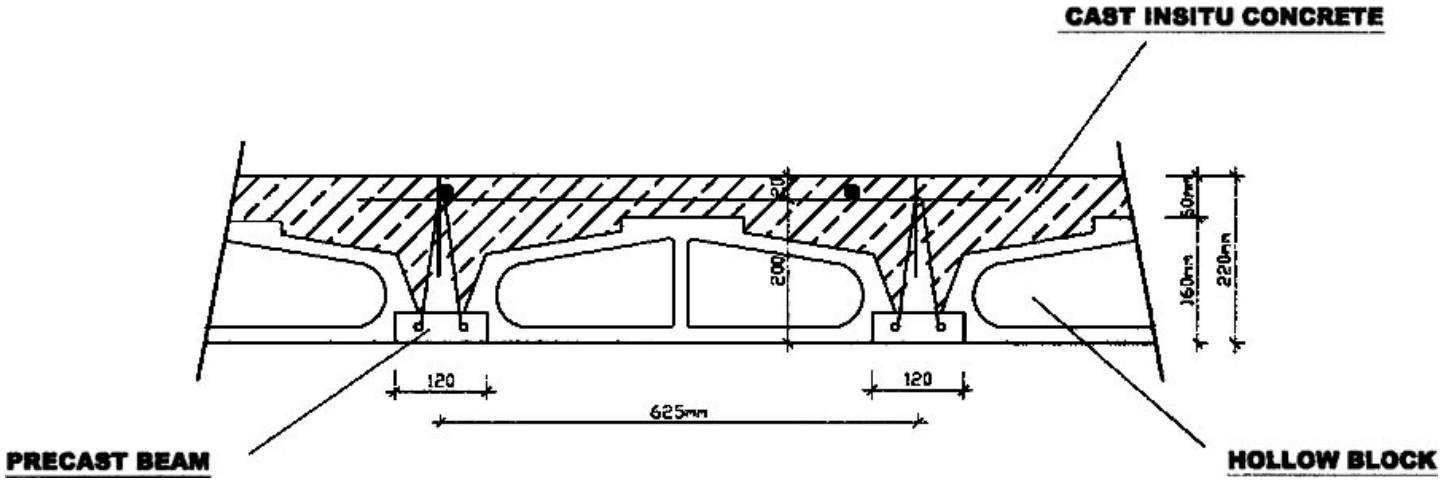

Typical Slab Section

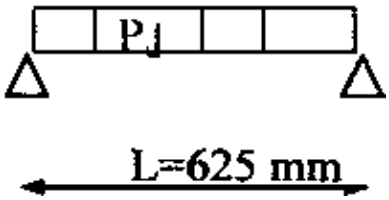

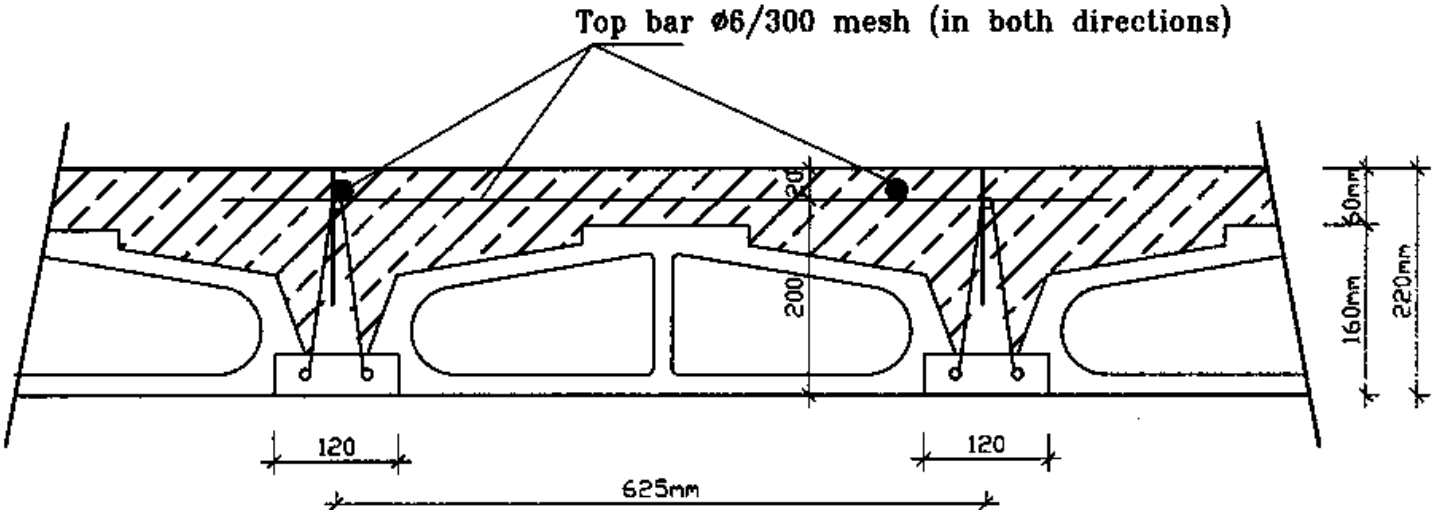

FIG–1s section of slab at final condition

Analysis of pre–cast beams

The analysis of the pre–cast beam is divided into two parts:

1. Initial condition
2. Final condition

Initial condition

For smaller spans up to 4 m the precast beam has a concrete section of 60 mm depth and 120 mm width at initial condition.

For larger spans up to 5 m a concrete section of 80 mm depth and 120 mm width has been used. For initial condition this pre cast beam is laid on the main beams supporting it. Since the initial condition is a transistory period the depth of the precast beam is chosen fulfilling the flexural requirement which is shown later. A typical precast beam section is shown in Fig.2s.

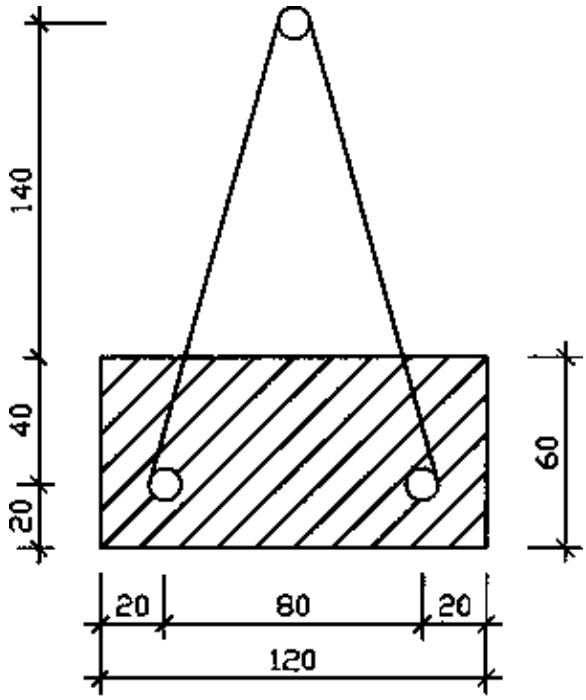

FIG–2s Detail of pre–cast beam

This precast beam is to be supported at midpoints in order to meet it's design requirements. A typical section of a precast beam with the hollow blocks at initial condition is shown in FIG–3s.

The pre–cast beam at initial condition is designed to carry the load that comes to it, for live load and dead load. It is provided with shear reinforcement that is compared with the code requirements and the load that comes to it.

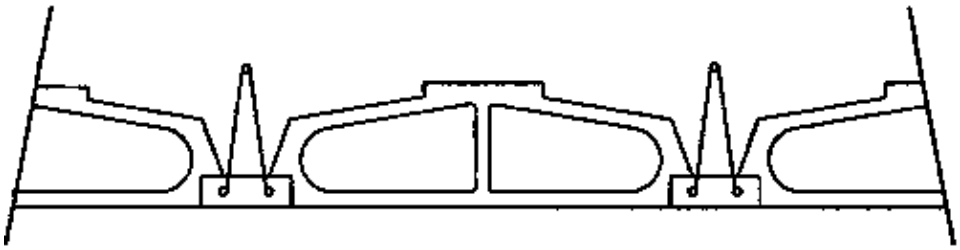

FIG–3s precast beam and HCB arrangement before top slab casting

Typical analysis of a precast beam at initial condition

Loading: dead load (gk):

– precast beam: 1.3*.12*.06*25	=	x
– concrete block: weight of hollow block	=	y
		g_k

live load (qk):

– depends on the purpose of structure	=	q_k

design load: p_d = $1.3g_k + 1.6q_k$

System:

$$M_{max} = \frac{P_d * L^2}{8}$$

$$C_s = \frac{m}{d}$$

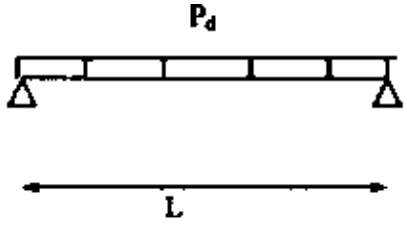

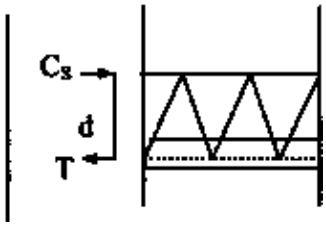

The compressive force Cs should be multiplied with the buckling ratio of the reinforcement and it's divided with the area of the re–bar which is checked with the allowable stress. The bottom reinforcement should be able to carry the design moment.

In some cases where the span is longer the precast beam is not able to carry the design moment, therefore a temporary intermediate support is provided. The analysis is done as shown beside.

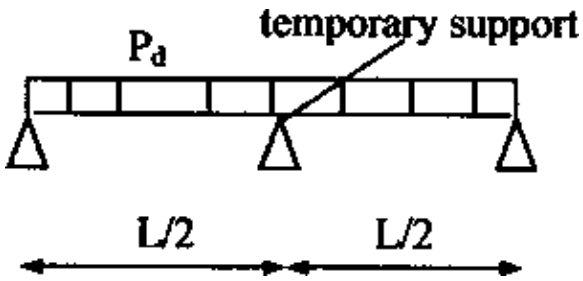

$$M^{+} = \frac{9P_d * (L/2)^2}{128}$$

$$M^{-} = \frac{P_d (L/2)^2}{8}$$

The corresponding Cs is calculated and it is divided with by the area of the reinforcement which is checked against the allowable stress capacity of the reinforcement. This is provided as a bottom reinforcement.

A negative moment developed at the temporary support. In the same case the stress coming to the reinforcement should be less than the allowable stress.

Checking for shear

The shear force that comes to the beam is calculated for maximum value. (v_{max})

v_{max} is distributed to the diagonal reinforcements and the appropriate re–bar is selected which can carry the induced stress.

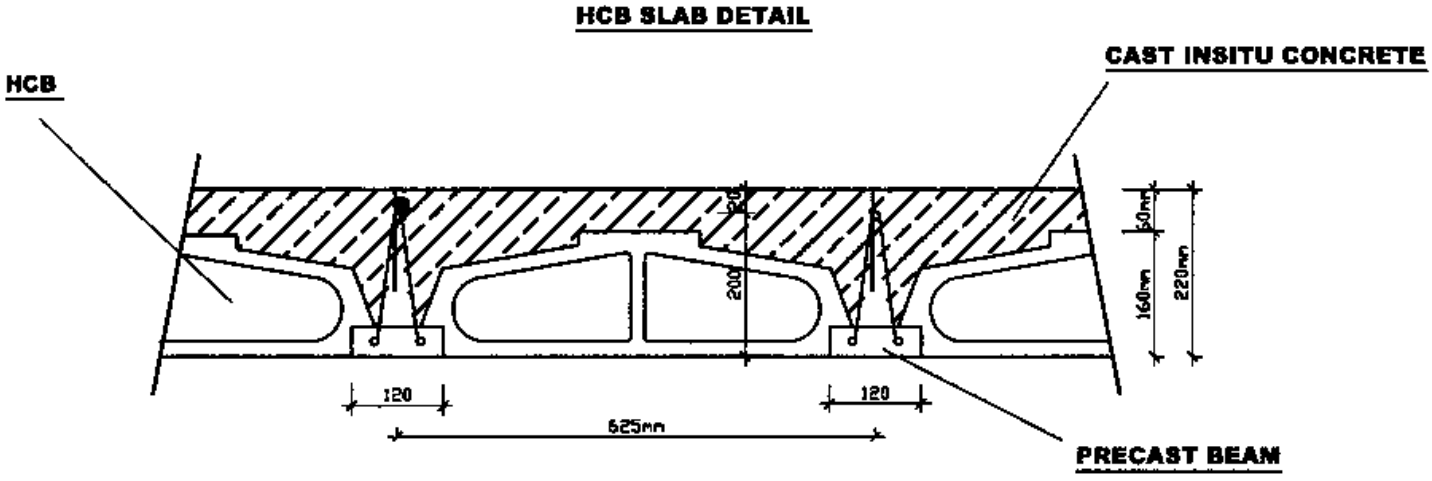

Fig–4s section of slab at final condition

Final condition

The section of the slab at final condition is shown in FIG–4s. The analysis is done as follows.

Loading:

dead load (g_k):

– precast beam: 1.3*.12*.06*25	=	x
– concrete block + cast insitu concrete	=	y
– floor finish + partition	=	z
		g_k

live load (q_k):

– depends on the purpose of structure

design load: p_d = $1.3^* g_k + 1.6^* q_k$

System:

$$m_{max} = \frac{P_d * L^2}{8}$$

d = D–d'–cover

$$\mu_{us} = \frac{md}{f_{cd} * b * d^2}$$

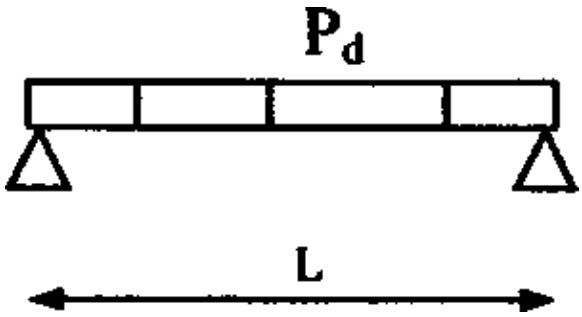

For this value of μ_{us} a graph is read from EBCS code and the value of k_x is read.

$k_x = x/d$

from this we can get the value of x.

This value is checked against the centroidal axis of the beam and it determines whether the beam acts as a T–beam or a rectangular section.

The same graph is used to determine the value of k_z.

$A_S = M/K_Z{}^*d^*f_{yd}$

The above equation is used to determine the area of steel.

Check for shear

The shear force that comes to the structure equals

$v_{sd} = p_d {}^*l/2$

This value is compared with the code requirements of the section which are

1. v_{sd} ? 2/3 V_{RD}
2. $2/3v_{RD} < v_{sd}$? v_c
3. $v_{sd} > v_c$

then the appropriate shear force equation is used to determine the reinforcement to be provided. All equations are checked against the requirements of the code.

The longitudinal section of a typical precast beam is shown in FIG–5s.

The slab system's depth varies depending on the span. For example a depth of 220 was used for a G+1 building with a maximum span of 4.0m. For longer spans a bigger depth may be used.

A depth of 280 mm was used for apartments with 5.0 m span in Addis Ababa.

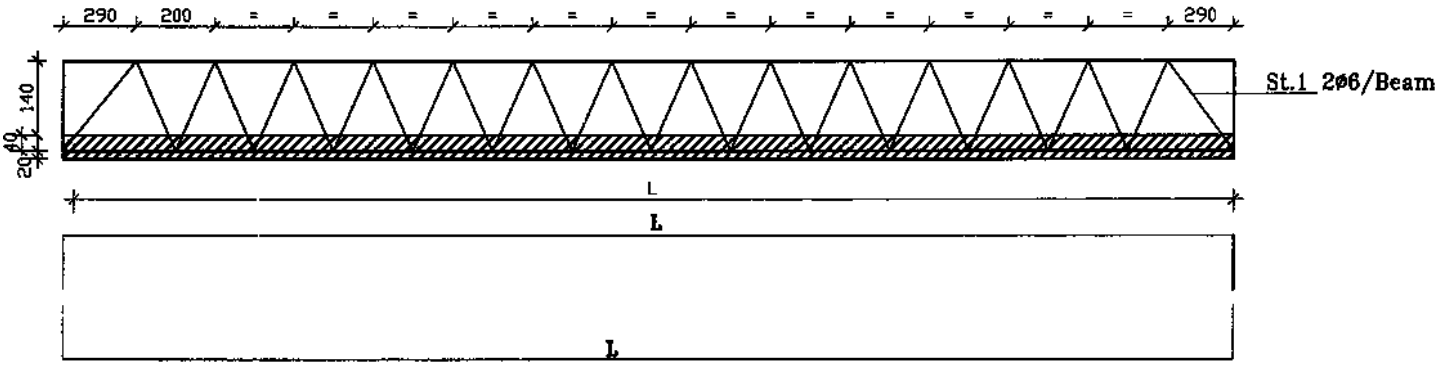

FIG–5s typical longitudinal section of precast beam

Analysis of beams and colums

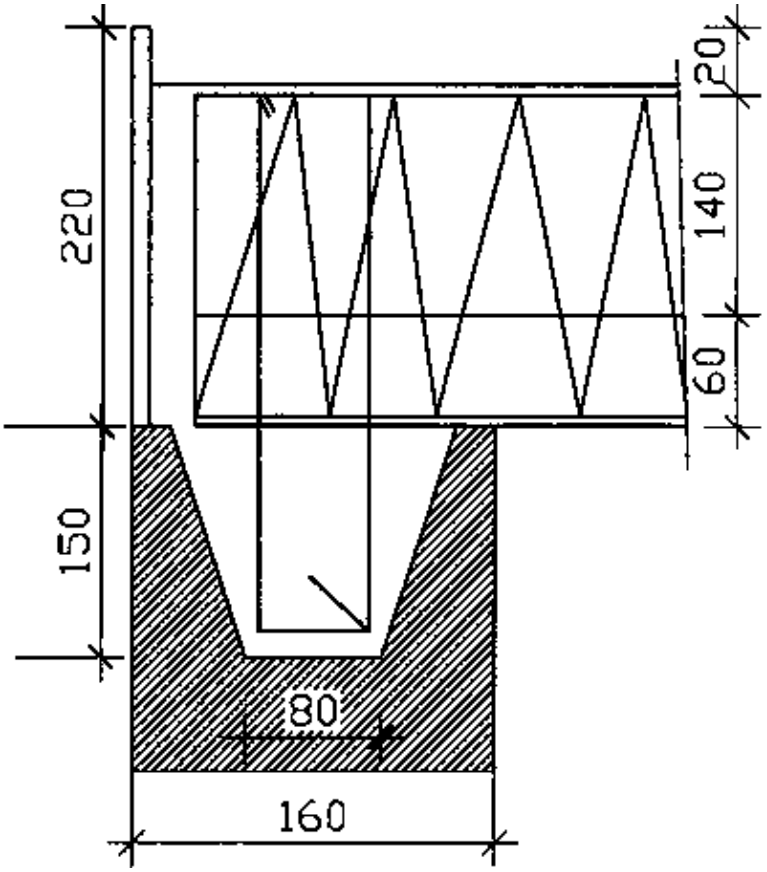

FIG–6s typical connection detail of U beam and pre cast beam

The beam is the primary structure that supports the pre cast beams.

There are two types of beams used in this approach

- Beam in U shaped HCB (supported by the wall)
- Beam without wall support

Beam in U shaped HCB

The U−beam carries load that comes from the precast beam and wall above and transfers it to the wall below and columns.

Since it is continuously supported by the load bearing wall below, minimum longitudinal and shear reinforcement is provided according to EBSC−2. Unless and other wise the lateral force is governing.

Beam without wall support

Such beams are used when there is no wall support due to openings. A small formwork is provided under this beam. The analysis of this beam and columns and the frame as a whole is made in a software using a 3−D model. (SAP 2000 was used in this case)

The column is totally braced by the wall. To consider this effect the wall is modeled together with the frame element in the analysis using FEM.

A typical section of the U−beam supporting a precast beam as shown in FIG−6s.

The layout of the pre cast beam is shown for a typical G+1 house in Fig−7s.

The pre cast beams are connected with reinforcement hooks inorder to take care of small negative moments that might develop and to insure stability. In the same way precast beams at edge are provided with additional negative reinforcements to take care of cracks that might develop by a negative moment.

The additional re−bar is shown in FIG−7s

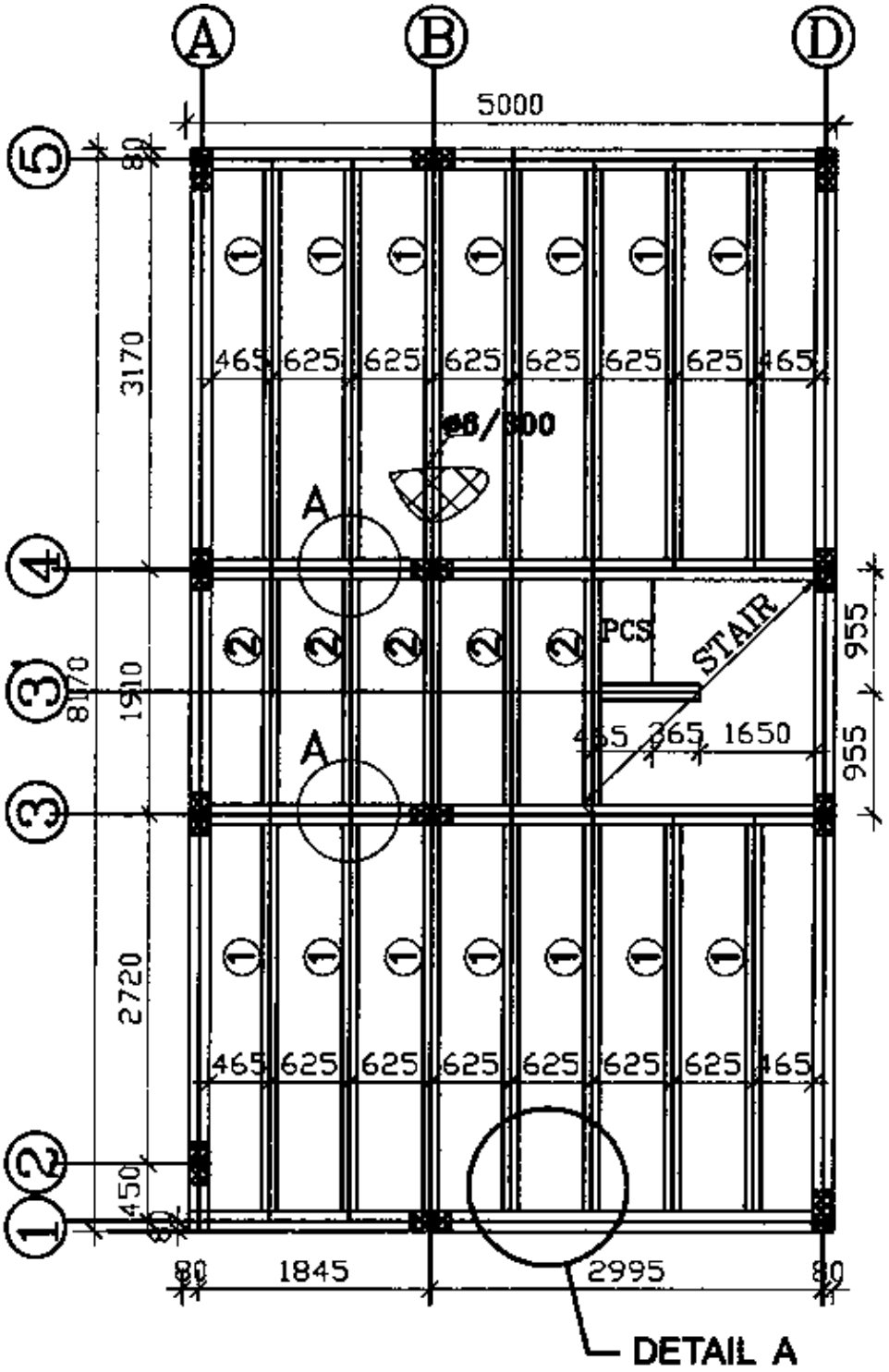

FIG–7s typical pre–cast beam layout

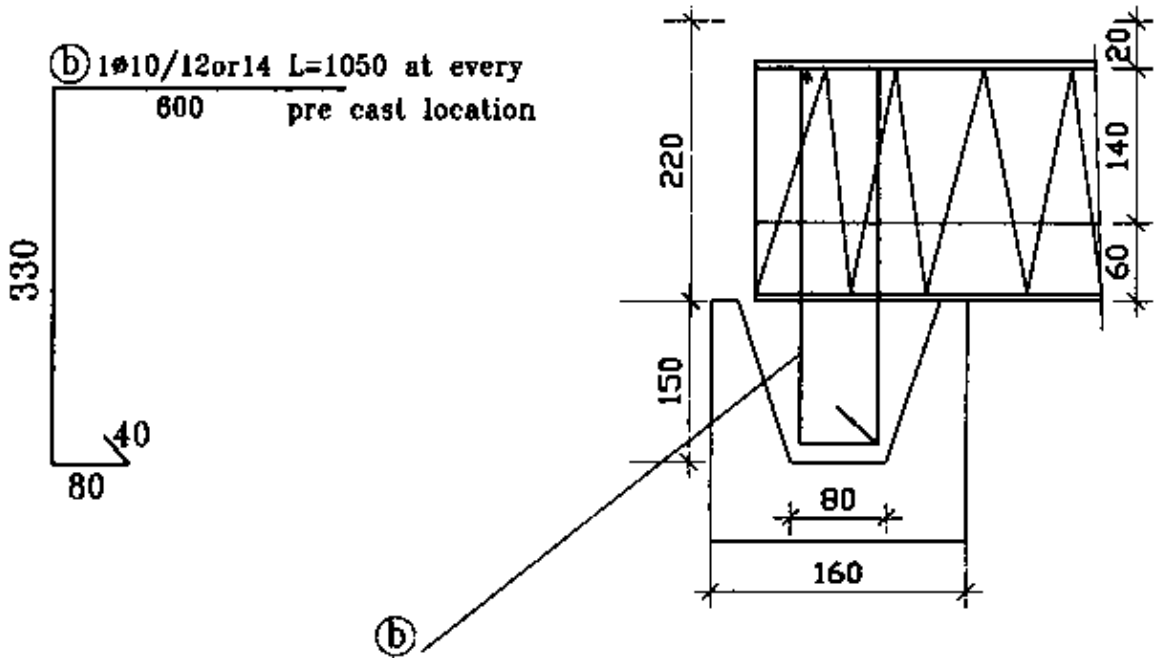

DETAIL A: Additional re−bar at edge

3D modelling

Modeling is done in the SAP analysis by using Finite Element Method. All joints in plan are horizontally constrained so that each member will have equal displacement and no compression force developes in beams and slabs. The wall is also assigned with 1/10th of stiffness of C−25 concrete and divided in to smaller element and joined with beams. This implies an HCB of class A or B should be used, Class A is preferred. Equivalent stiffness is taken due to pre−cast beam in the 3D modelling so that they transfer the lateral and vertical load to columns and beams respectively.

For the foundation analysis mat and footing are commonly used depending on type of soil condition and building type. In the case of mat foundation the mat is modeled together with the super structure and the TABLE−1: typical mat slab design chart spring constant is assigned depending on the type of the soil. This coefficient is taken from soil test result and literature. After the analysis is made moment reading is taken from the SAP result and design will be made using Excel program shown in Table−1. In the case of isolated footing foundation, fixed support is assumed, totally restrained condition is chosen and assigned at the base of column. After the analysis is made reactions are taken and footing design can be done with any suitable footing design program.

SAP models of the "Addis", "Mekelle A" and "Addis Apartments" housing types are also shown together with structural drawings on the following pages.

MAT SLAB REINFORCEMENT

b	d	M	N	B	As	dia.	C/C Spacing	As provided
(m)	*(m)*	*(KNm)*	*M/Fcd*b*d^2*	*1−(1−2N)^.5*	*B*Fcd*b*d/Fyd*	*(mm)*		
1	0.13	60	0.265	0.314	1574	14	106	Dia. 14/100
1	0.13	50	0.221	0.253	1265	14	132	Dia. 14/130
1	0.13	40	0.177	0.196	980	12	125	Dia. 12/125
1	0.13	30	0.132	0.143	714	12	172	Dia. 12/170
1	0.13	20	0.088	0.093	464	10	184	Dia. 10/180
1	0.13	15	0.066	0.069	343	8	159	Dia. 8/160

1	0.13	10	0.044	0.045	226	8	242	Dia. 8/230

TABLE–1: typical mat slab design chart

Summary

All in all purpose of the design is to make a safe and economical structure that meets it's intended purpose.

The design of the buildings meets the standard code of practice of the country. It is fast, economical and very little formwork is required.

Sample structural drawings for Addis housing type

(Alert Site)

MAT FOUNDATION SLAB REINF.

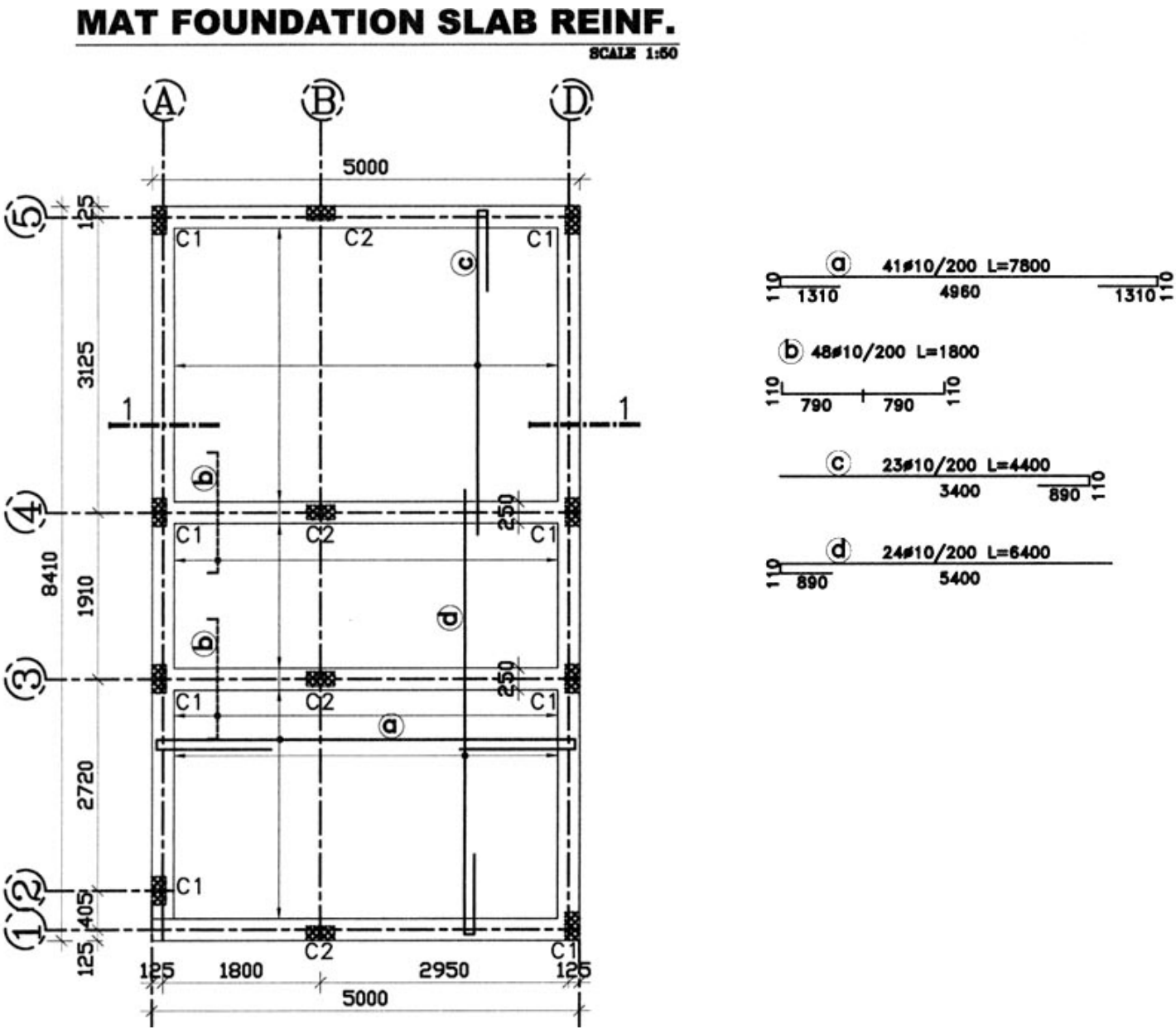

FIRST FLOOR SLAB REINF.

FIRST FLOOR SLAB REINF.

SCALE 1:50

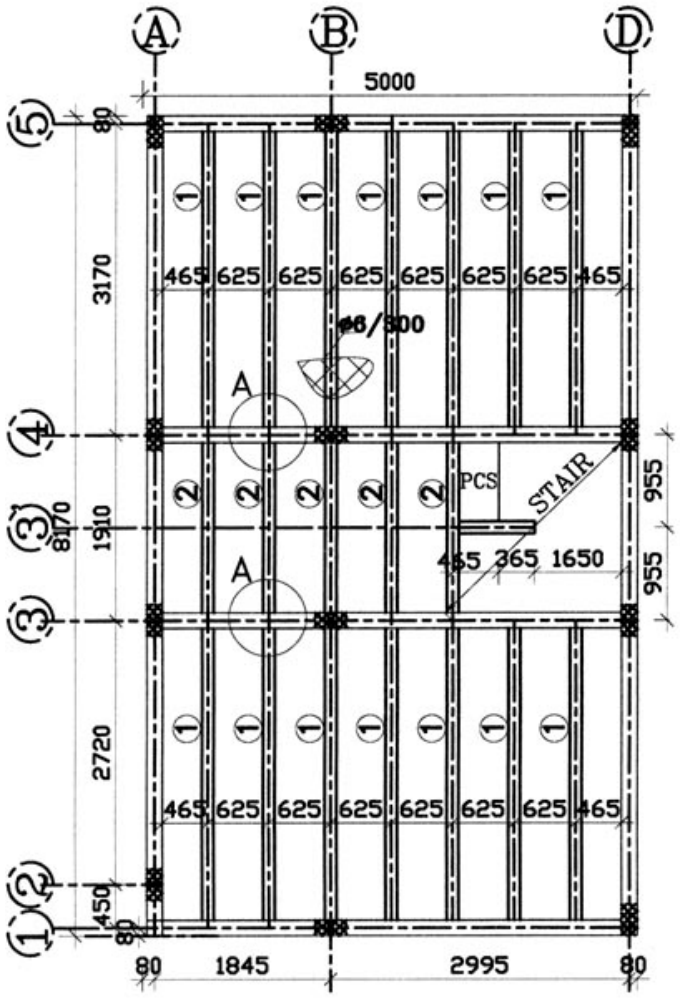

FFB−1 First floor beam A-B-D on axis 1

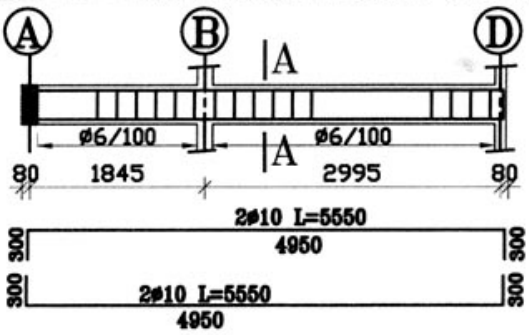

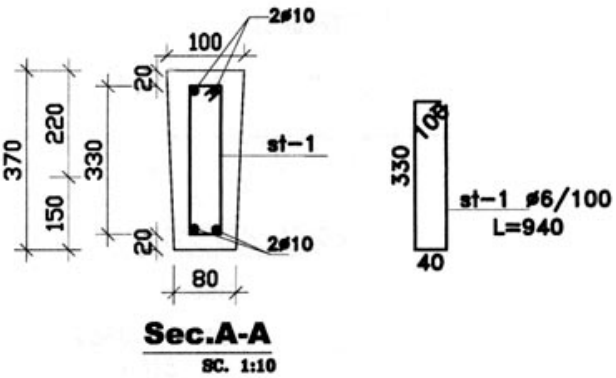

COLUMNS

C-1 (8pcs)

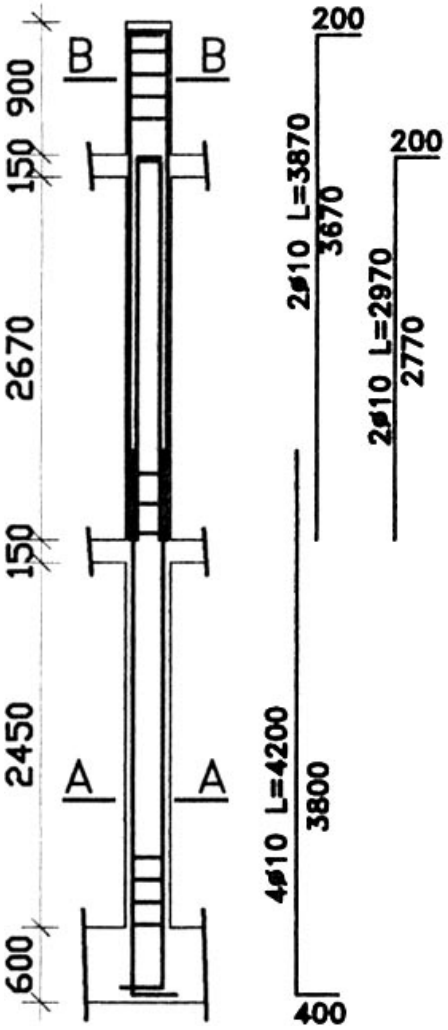

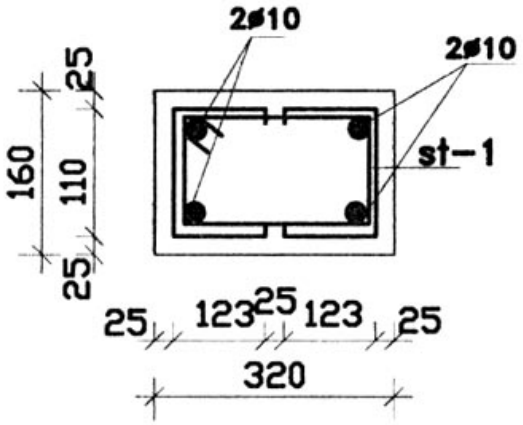

SEC.A-A
Sc1:10

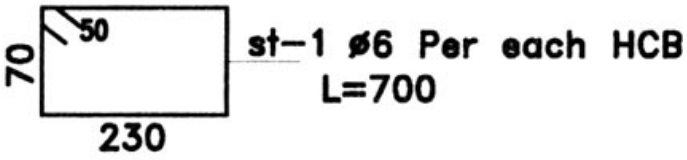

MAT BEAMS

MB-1 Mat beam A-B-D on axis 1

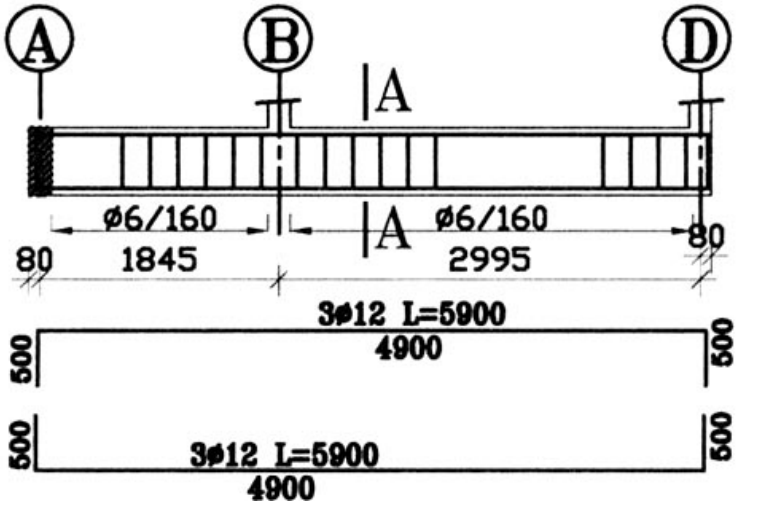

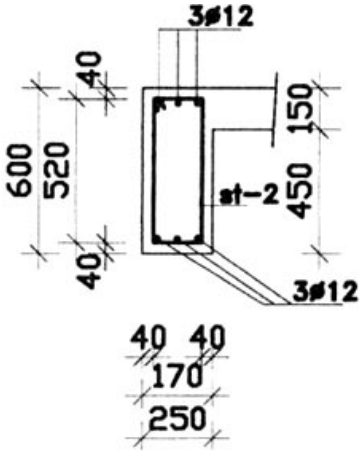

SEC.A-A
Sc1:25

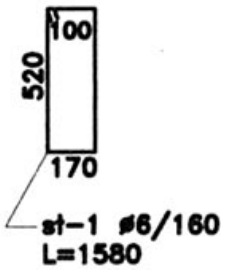

PRECAST BEAM DETAIL

PRECAST BEAM -1 (1694pcs)

SCALE 1:10

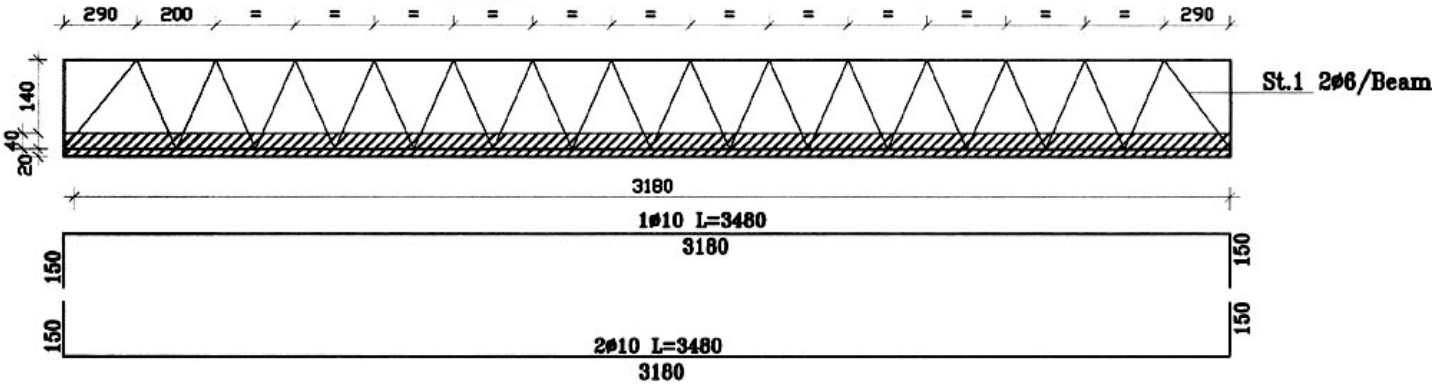

ROOF TRUSS LAYOUT

SCALE 1:50

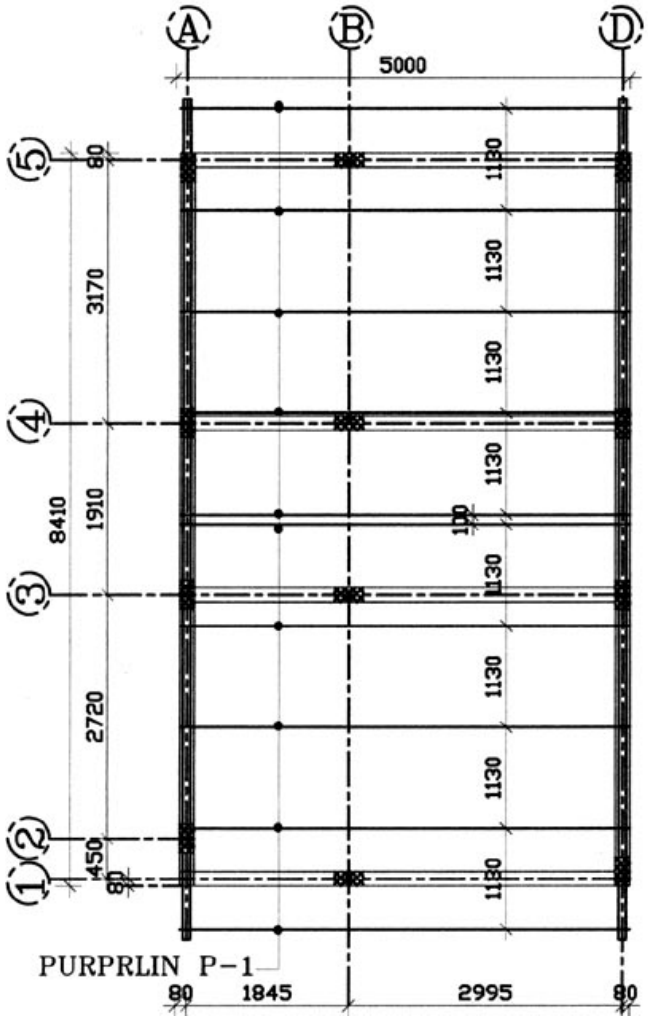

RB−1 Roof beam A-B-D on axis 1

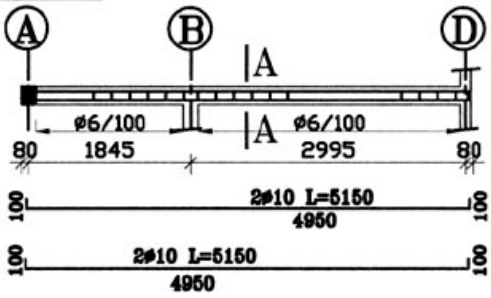

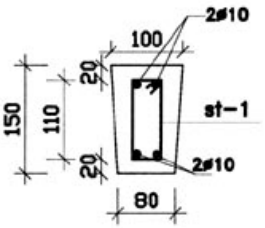

Sec.A-A

SC. 1:25

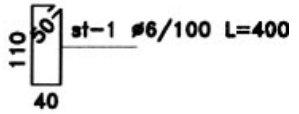

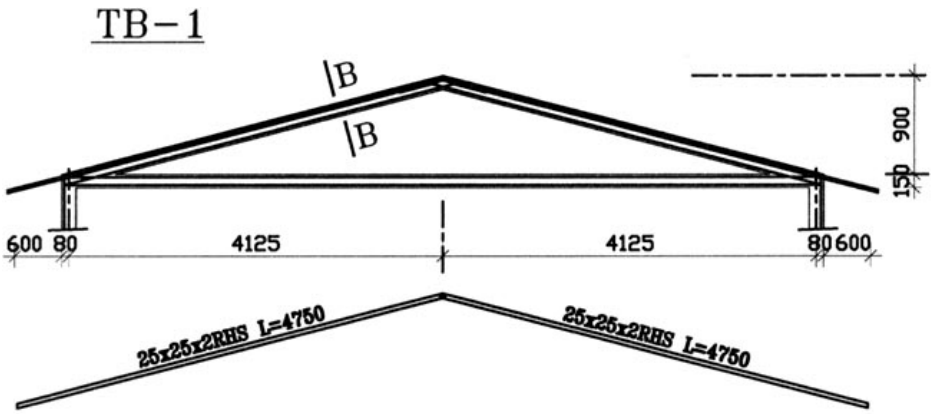

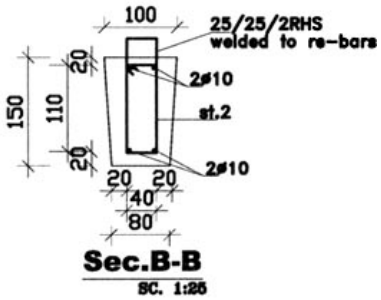

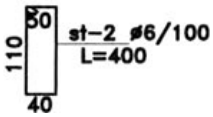

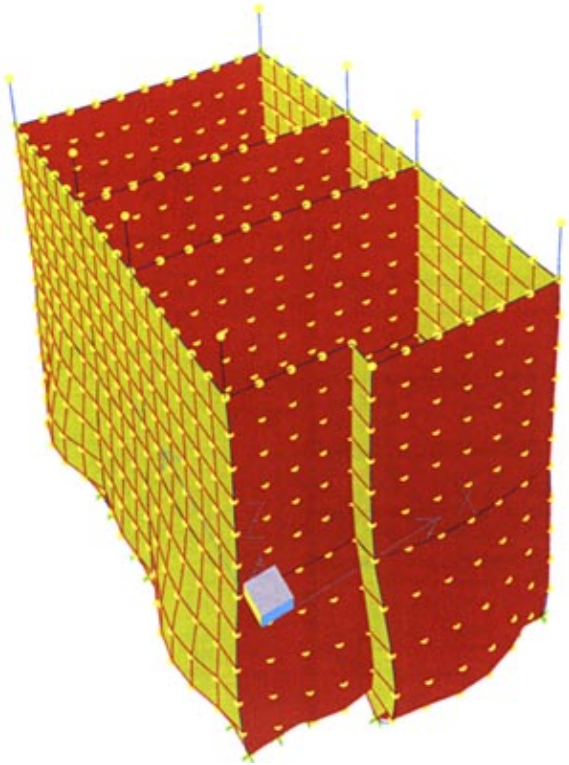

SAP 2000 model, deformed shape of the 3D model

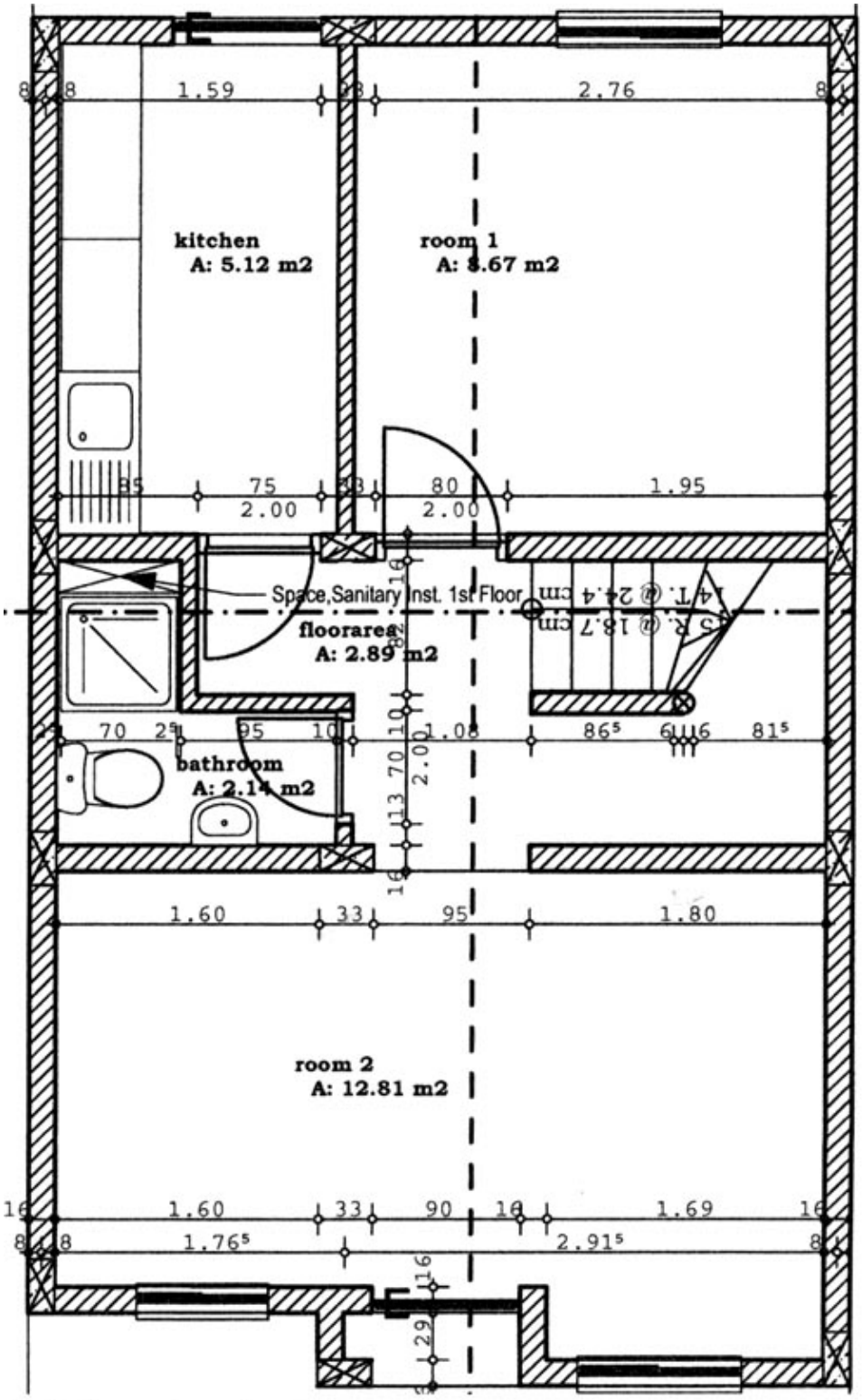

Building plan for the model

FIG–8s SAP 3–D Deformed shape model and corresponding drawing of the ground floor (Addis Type)

Sample structural drawings for the Mekelle "A" housing type

MAT SLAB REINF.

SCALE 1:50

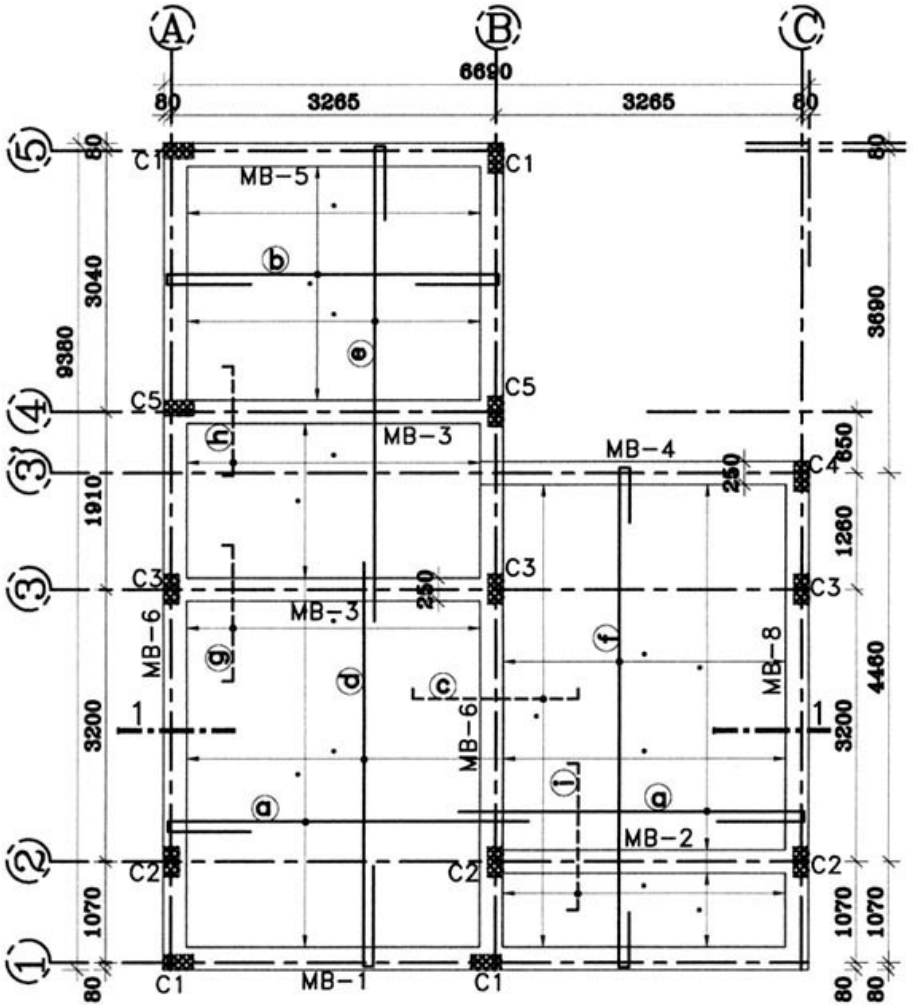

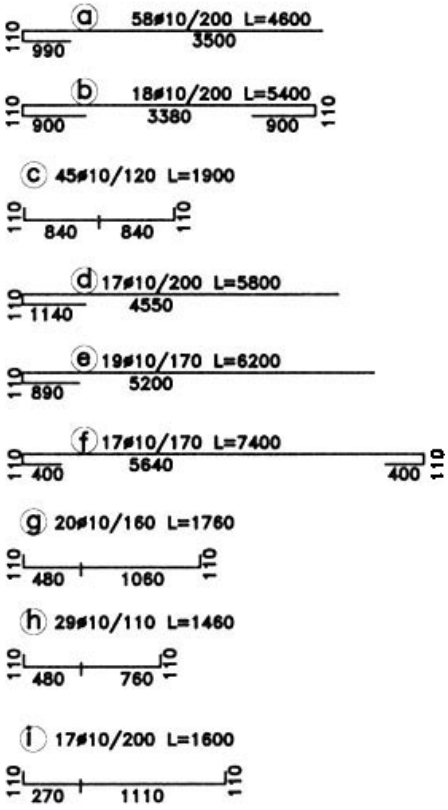

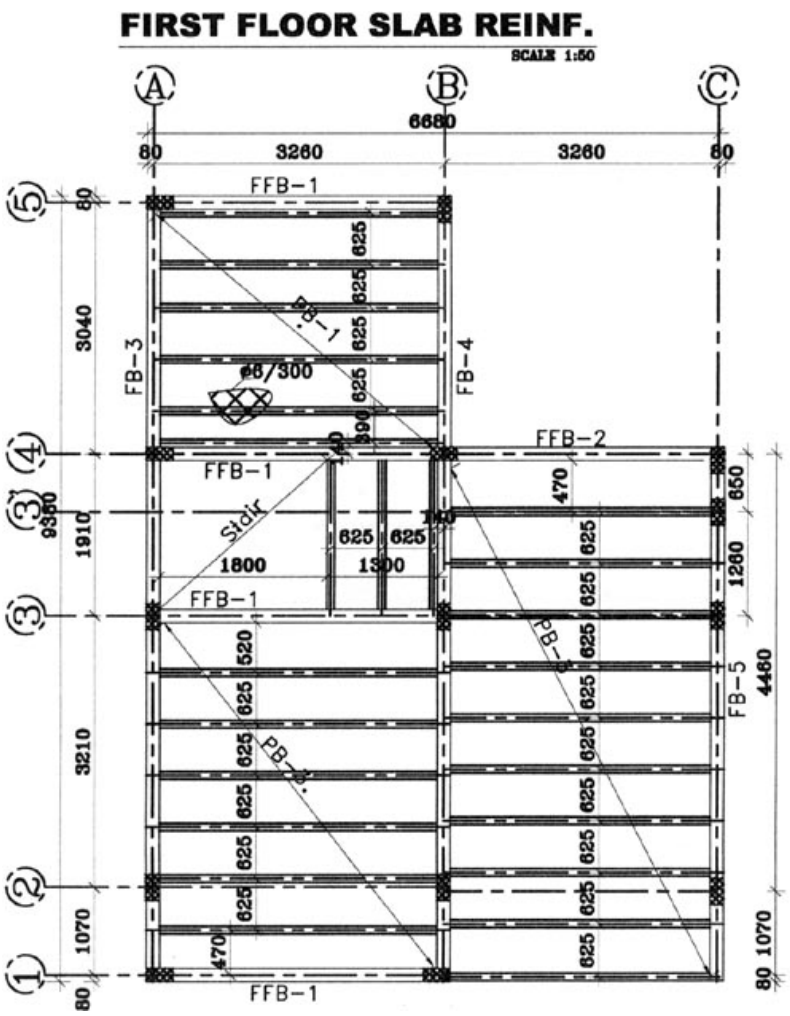

FFB−1 First floor beam A-B on axis 1,3,4 & 5

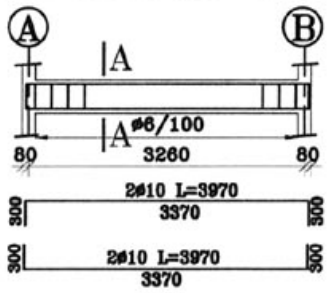

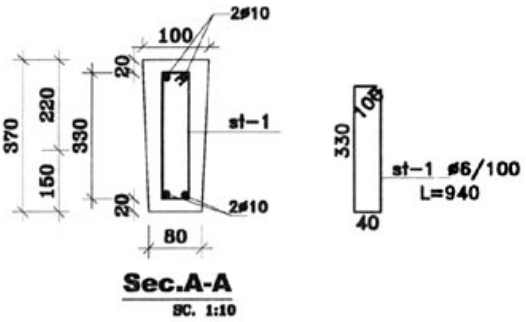

MAT BEAMS

C-1 (4pcs)

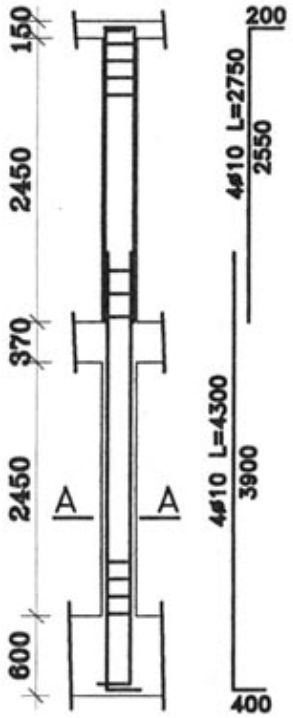

MB−1 Mat beam A-B-C on axis 1

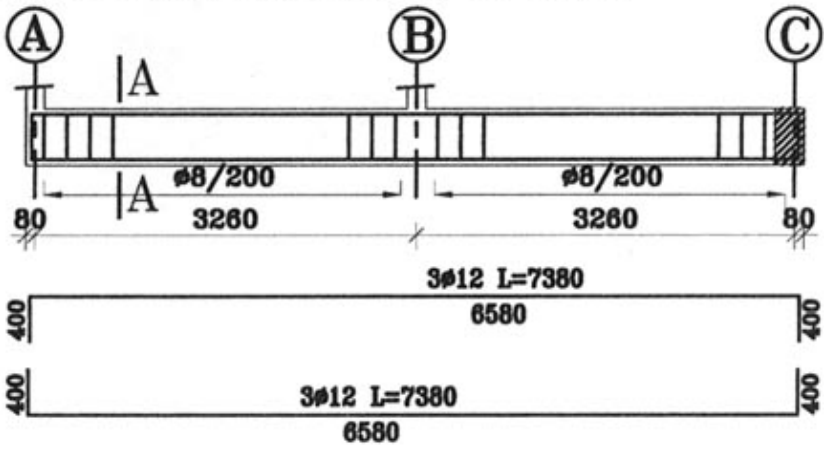

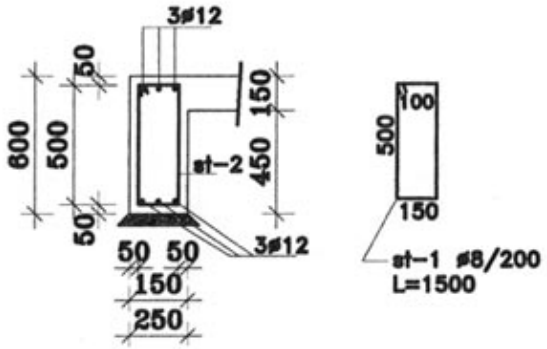

SEC.A-A
Sc1:25

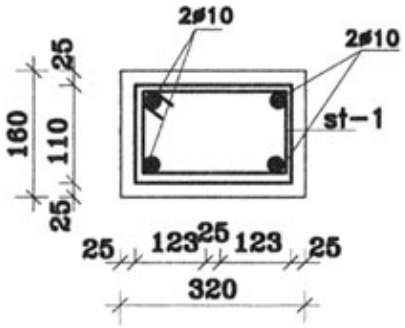

SEC.A-A
Sc1:10

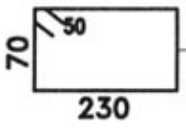

st-1 ø6 Per each HCB
L=700

PRECAST BEAM -1

SCALE 1:10

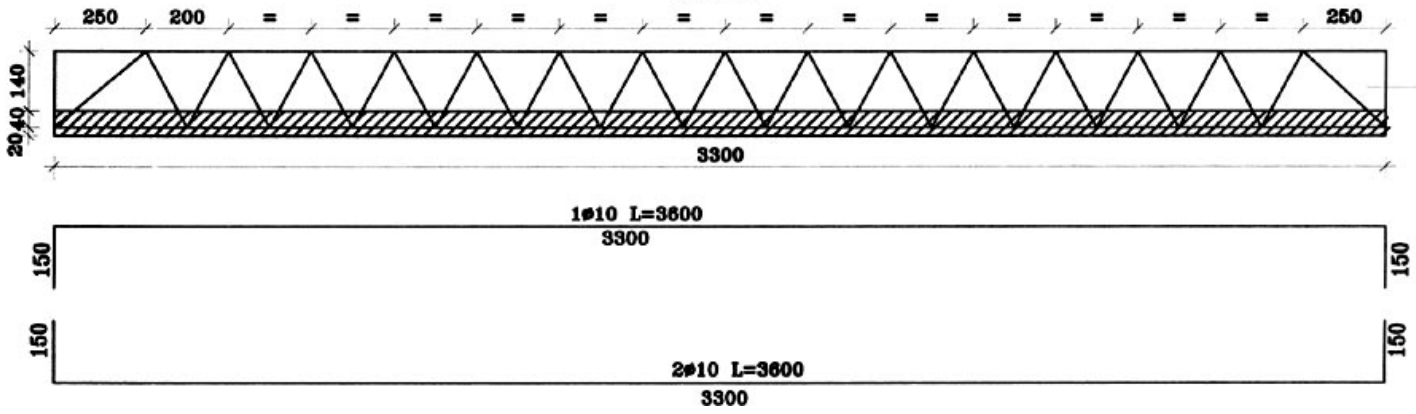

ROOF TRUSS AND PURLIN LAYOUT

SCALE 1:50

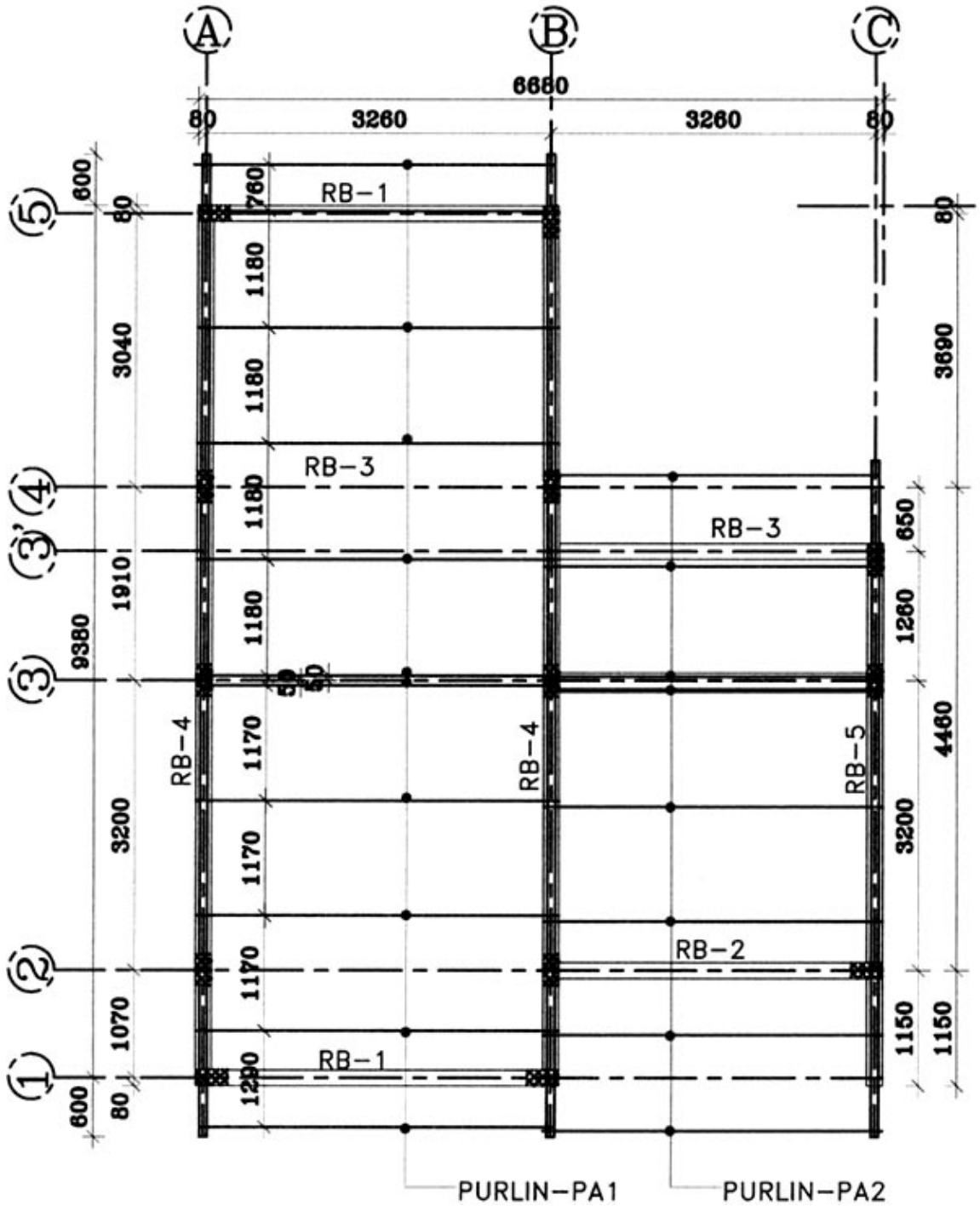

ROOF BEAMS

RB−1 Roof beam A-B on axes 1 & 5 at level +5.42

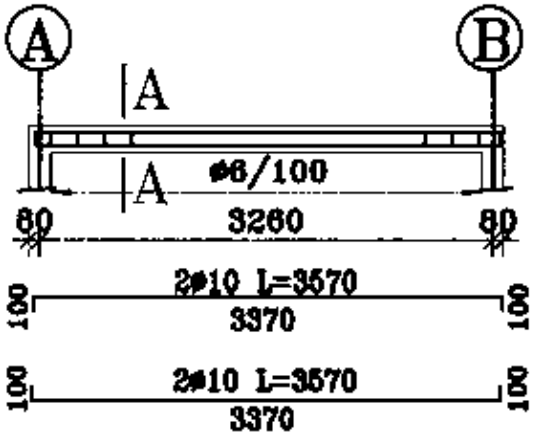

PURLIN-PA1 Lattice purlin (11pcs)

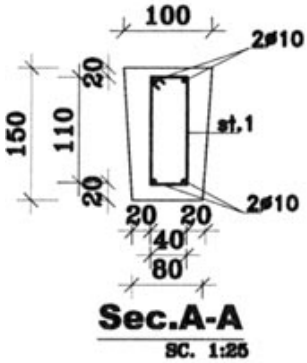

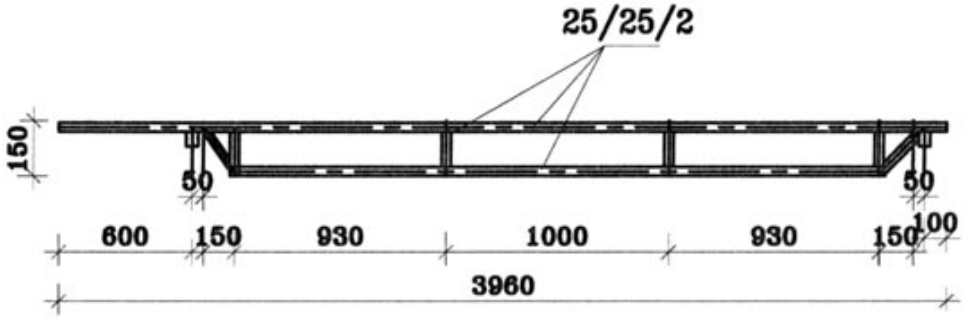

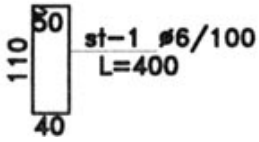

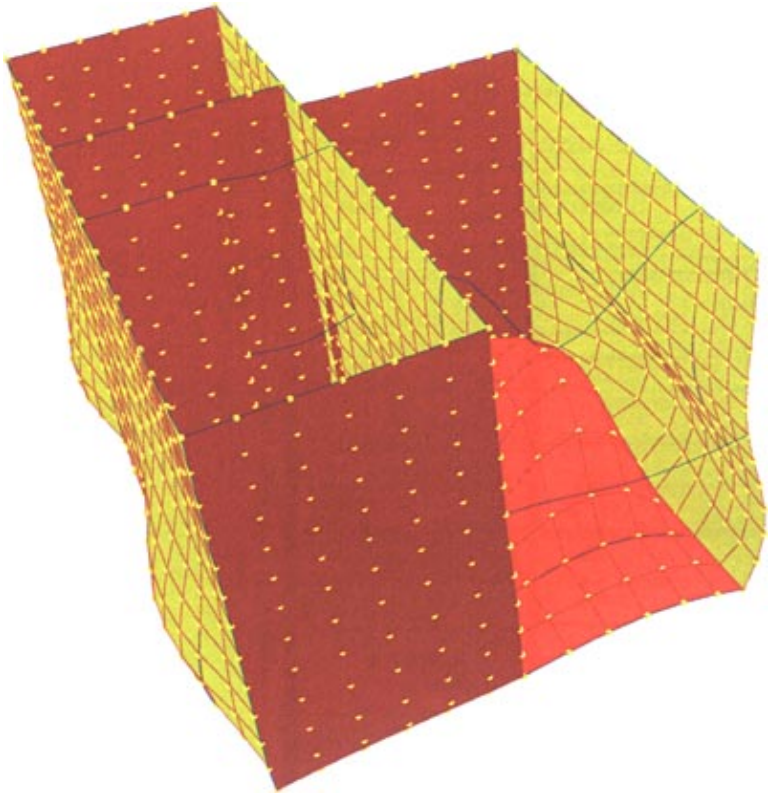

SAP 2000 model, deformed shape of the 3D model

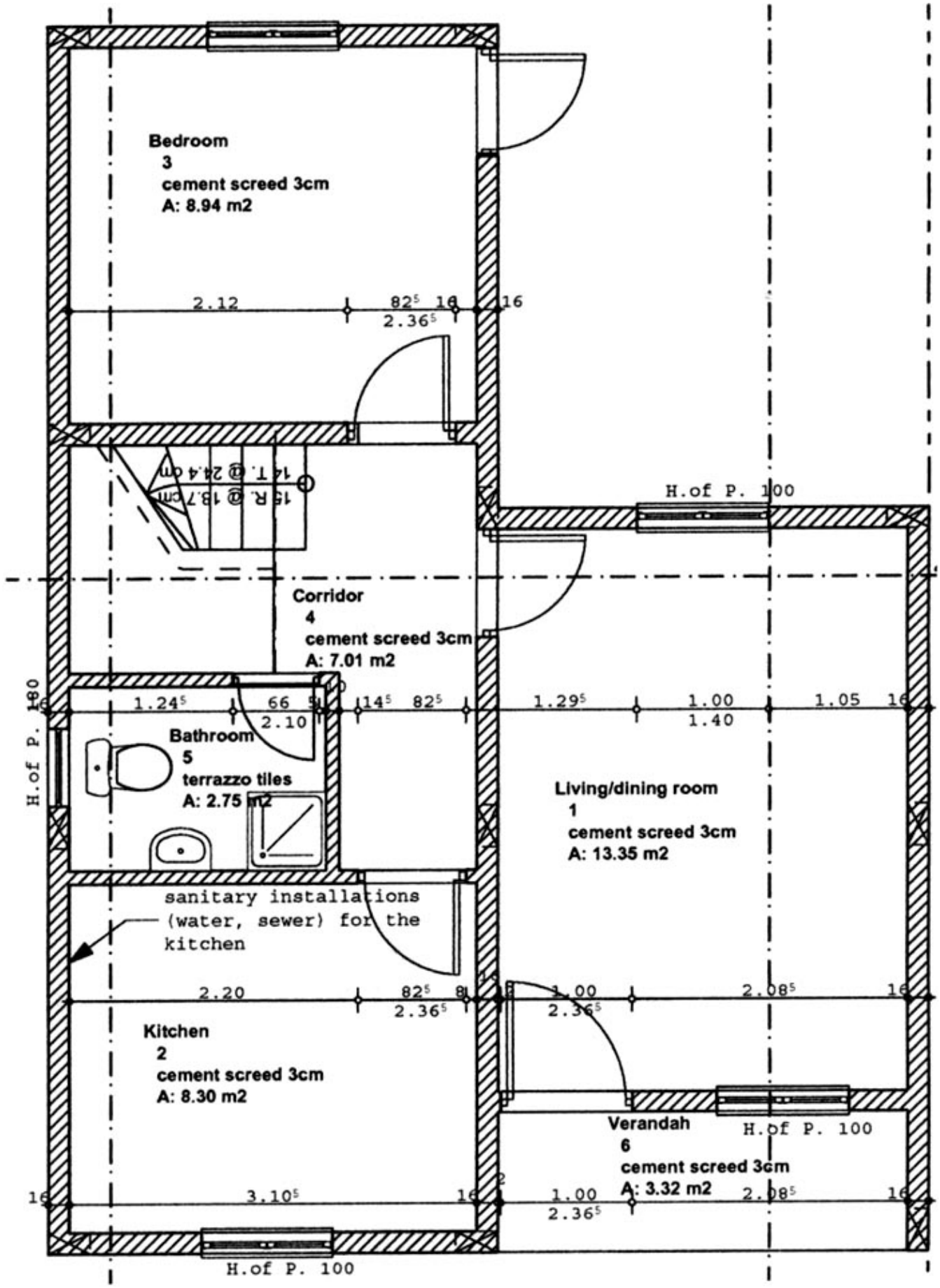

Building plan for the model

FIG–9s SAP 3–D deformed shape model and corresponding drawing of the ground floor (Mekelle)

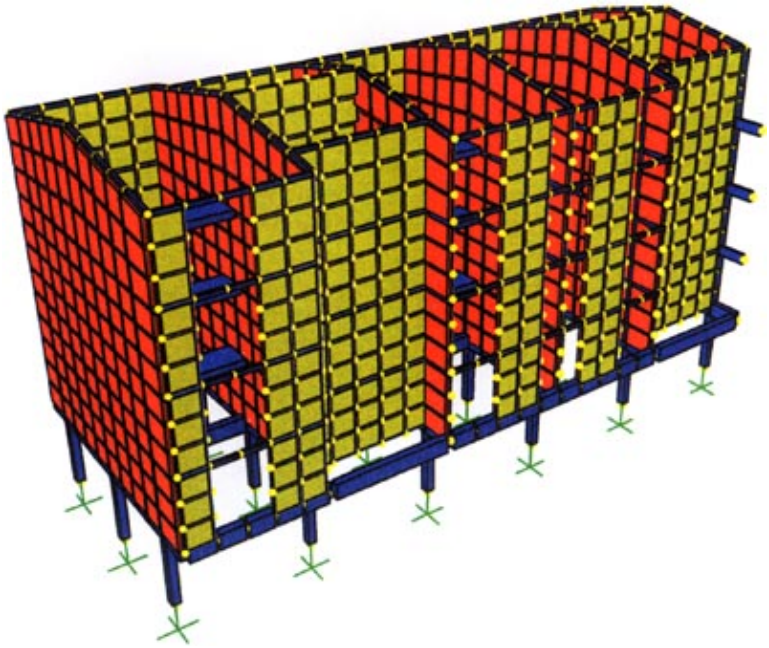

SAP 2000 model, deformed shape of the 3D model

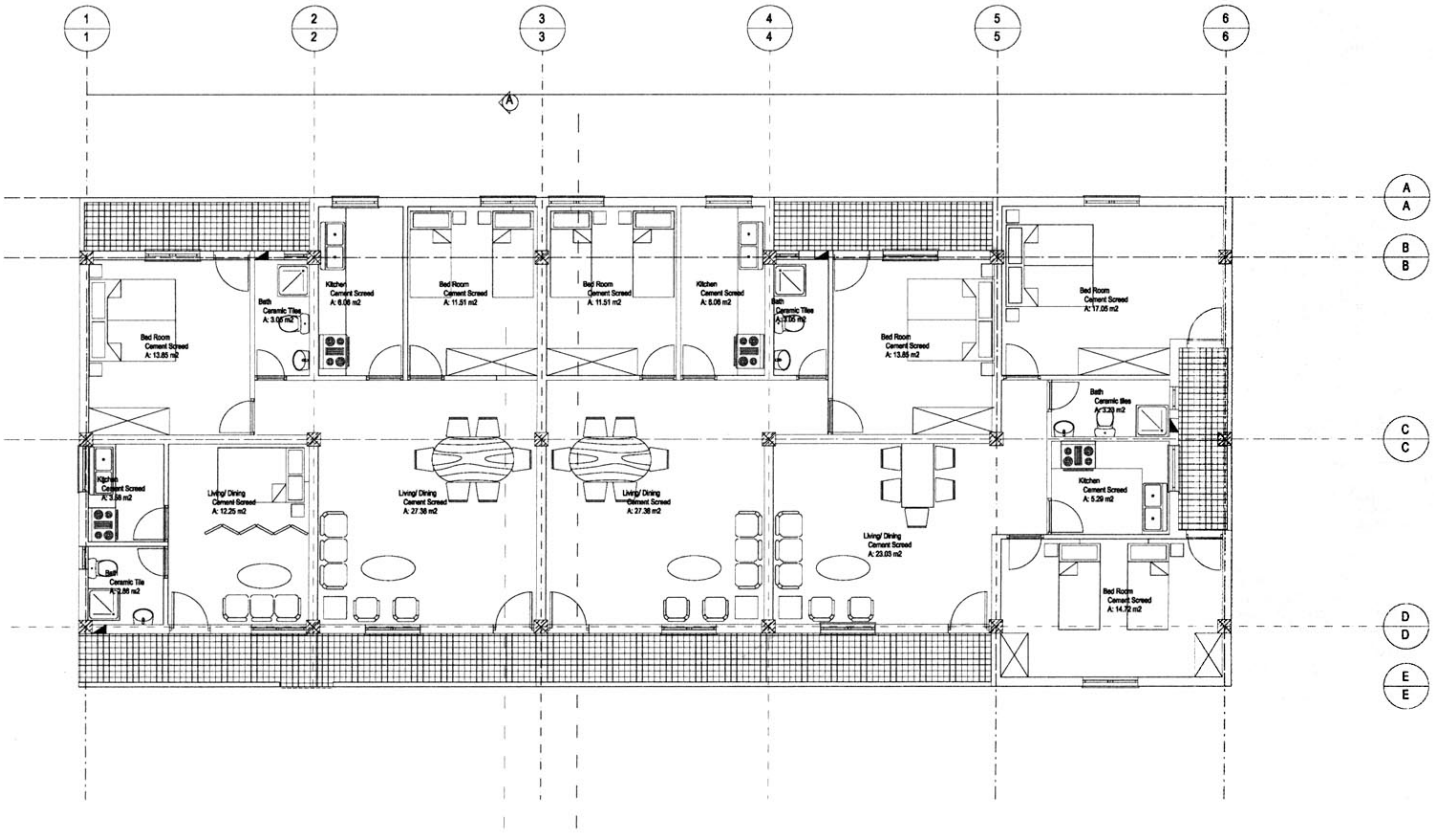

Building plan for the model

FIG–10s SAP 3–D deformed shape model and corresponding drawing of the ground floor (Addis Apartments)

NOTES

Back Cover

Supported by:

Ethio-German TVET Programme